Unit 7, Lesson 8

Quadrilaterals in Circles

Let's investigate quadrilaterals that fit in a circle.

8.1 Connecting the Dots

For each quadrilateral, use a compass to see if you can draw a circle that passes through all 4 of the quadrilateral's vertices.

A

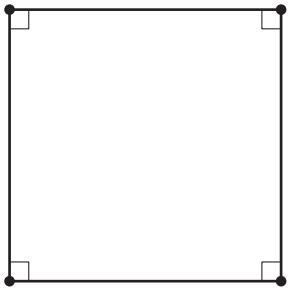

B

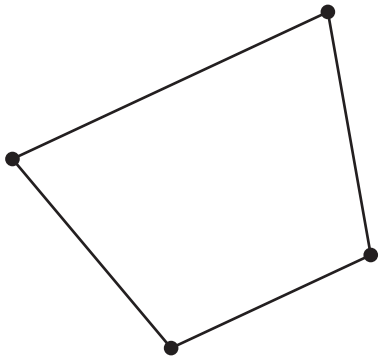

C

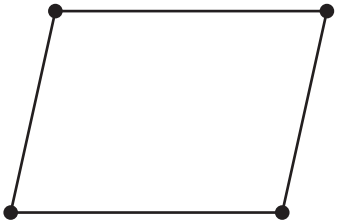

8.2 Inscribed Angles and Circumscribed Circles

1. The images show 3 quadrilaterals with **circumscribed** circles.

A

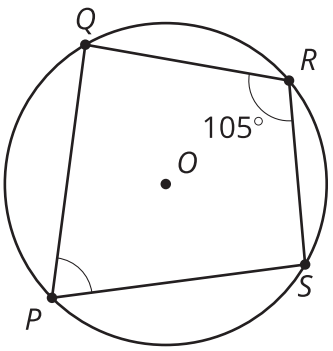

B

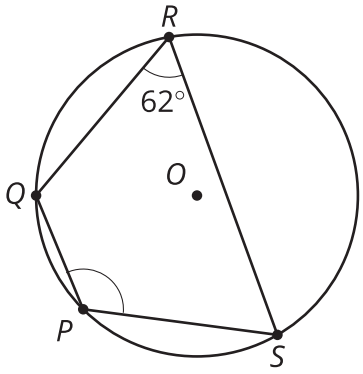

C

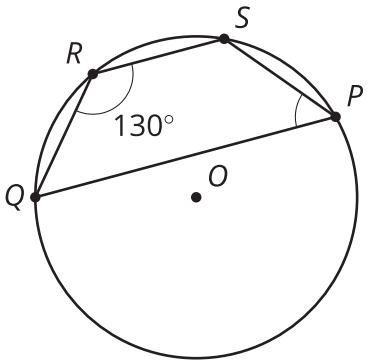

For each one, highlight the arc from S to Q passing through P. Then find the measures of:

a. the arc you highlighted

b. the other arc from S to Q

c. angle SPQ

2. Here is another quadrilateral with a circumscribed circle. What is the value of $\alpha + \beta$? Explain or show your reasoning.

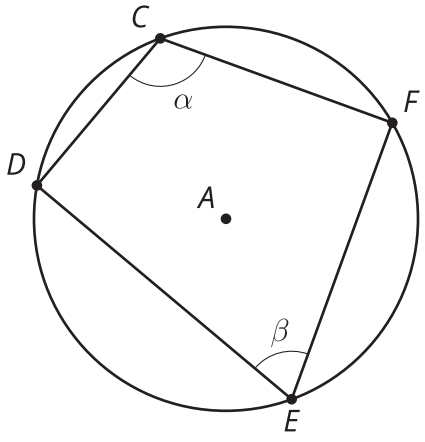

Are you ready for more?

Brahmagupta's (brah-muh-GOOP-tuh) formula states that, for a quadrilateral whose vertices all lie on the same circle, the area of the quadrilateral is $\sqrt{(s-a)(s-b)(s-c)(s-d)}$, where a, b, c, and d are the lengths of the quadrilateral's sides and s is half its perimeter.

In the cyclic quadrilateral in the image, point O is the center of the quadrilateral's circumscribed circle. Validate Brahmagupta's formula for this particular quadrilateral by first finding the sum of the areas of the top and bottom triangles. Then calculate the area again using Brahmagupta's formula.

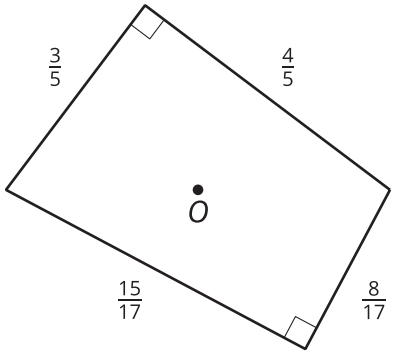

8.3 Construction Ahead

Quadrilateral $ABCD$ is a **cyclic quadrilateral**.

$\overline{DC} \perp \overline{CB}$

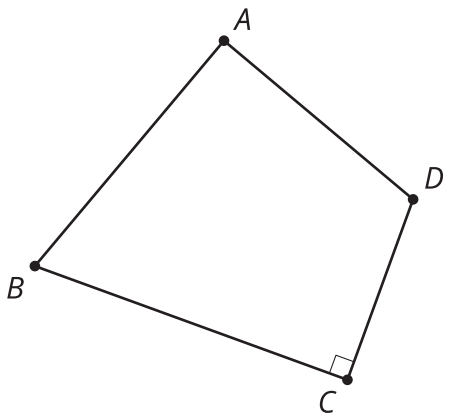

1. Draw diagonal BD. How will this diagonal relate to the circumscribed circle? Explain your reasoning.

2. Construct the center of the circumscribed circle for quadrilateral $ABCD$. Label this point O. Explain why your method worked.

3. Construct the circumscribed circle for quadrilateral $ABCD$.
4. Could we follow this procedure to construct a circumscribed circle for *any* cyclic quadrilateral? Explain your reasoning.

Lesson 8 Summary

A circle is said to be **circumscribed** about a polygon if all the vertices of the polygon lie on the circle. If it is possible to draw a circumscribed circle for a quadrilateral, the figure is called a **cyclic quadrilateral**. Not all quadrilaterals have this property.

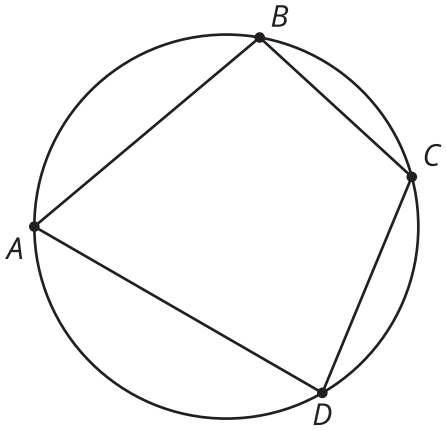

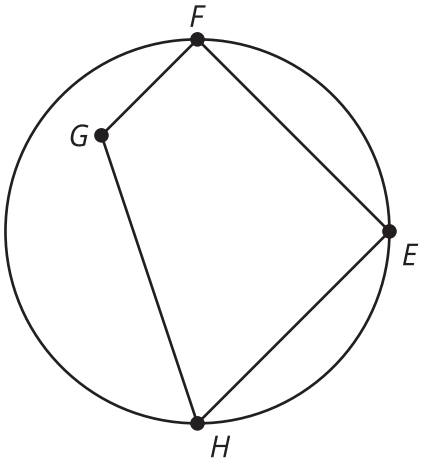

We can prove that the opposite angles of a cyclic quadrilateral are supplementary. Consider opposite angles BCD and BAD, labeled α and β.

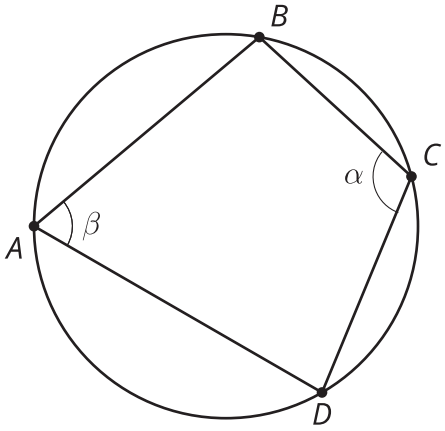

Angle BAD is inscribed in the arc from B to D through C. Angle BCD is inscribed in the arc from B to D through A. Together, the two arcs trace out the entire circumference of the circle, so their measures add to 360 degrees. By the Inscribed Angle Theorem, the sum of α and β must be half of 360 degrees, or 180 degrees. So angles BAD and BCD are supplementary. The same argument can be applied to the other pair of opposite angles.