Cross-Sections and Volume

Let's look at how cross-sections and volume are related.

10.1 Two Stacks of Coins

The images show the same number of coins arranged in different ways.

A

B

1. How are the two coin stacks different from each other?

2. Does either stack of coins resemble a geometric solid? If so, which stack and what solid?

3. How do the heights of the two stacks compare?

4. How do the volumes of the two stacks compare? Explain your reasoning.

10.2 Rectangular Prism, Shifted

The image shows two rectangular prisms. The bases of the prisms are congruent. Each base has an area of B square units, and the prisms are the same height. A plane intersects the two prisms parallel to their bases, creating cross-sections.

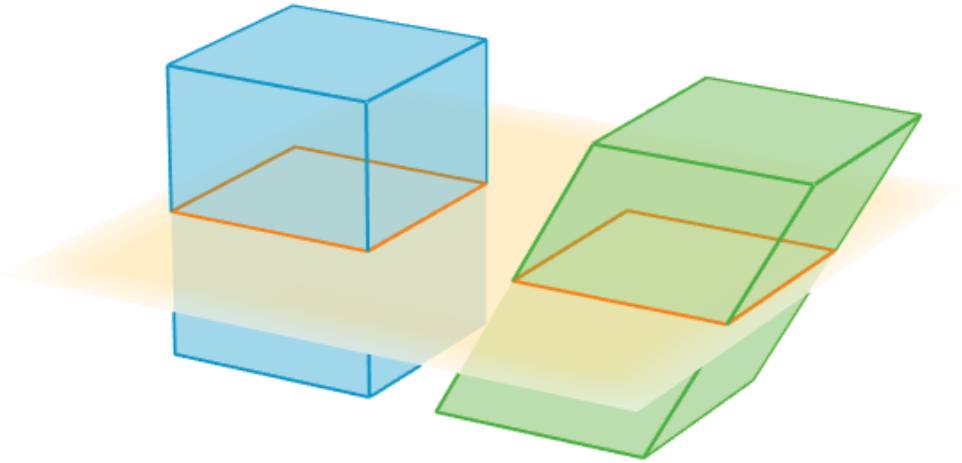

1. Sketch the two cross-sections. How do their shapes and areas compare to each other?

2. How would the shape or area of the cross-sections change if we moved the plane up or down?

3. How do the volumes of the two prisms compare? Explain your reasoning.

10.3 Equal Volumes?

For each pair of solids, decide whether the volumes of the two solids are equal. Explain your reasoning. If you and your partner disagree, discuss each other's approach until you reach agreement.

1.

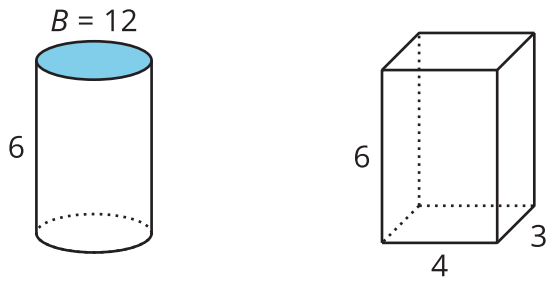

2.

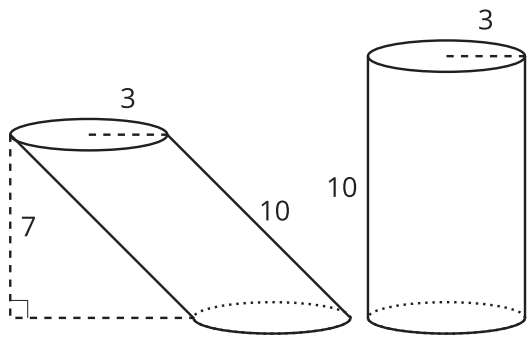

3.

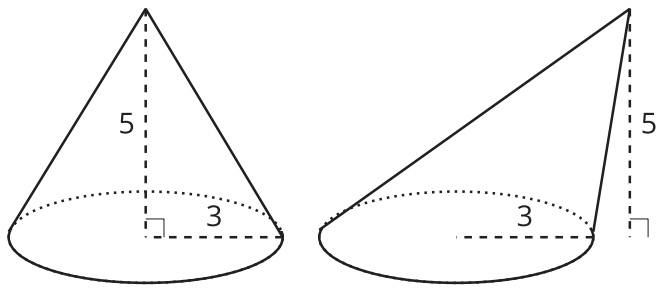

4.

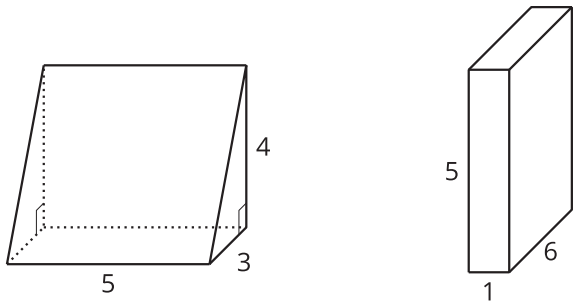

5.

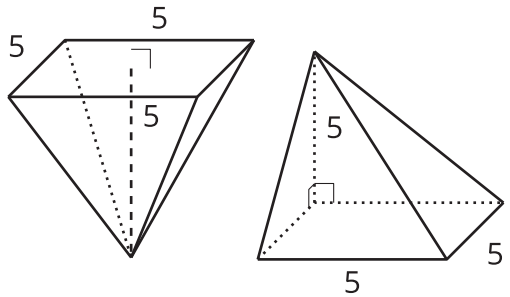

6.

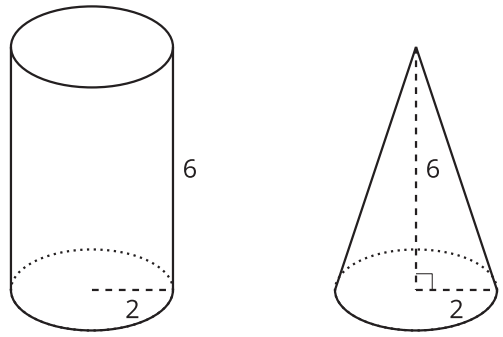

Are you ready for more?

The image shows a recomposition of a solid.

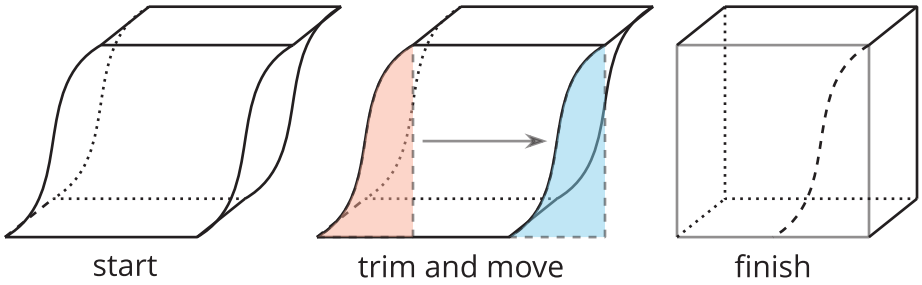

How does this demonstrate Cavalieri's Principle?

Lesson 10 Summary

Suppose we have a stack of paper in the shape of a rectangular prism. Then we shift the paper so the prism slants to the side. The first is called a **right** prism because its sides are at right angles to its base. The second one, without right angles between the sides and the base, is called an **oblique** prism. The volume of the prism doesn't change when we shift it—the amount of paper stays the same.

In fact, **Cavalieri's Principle** says that if any two solids are cut into cross-sections by parallel planes, and the corresponding cross-sections at all heights all have equal areas, then the solids have the same volume.

The oblique cylinder and the right prism in this image have equal volumes because they have the same height and their cross-sections at all heights have the same area of 6 square units.

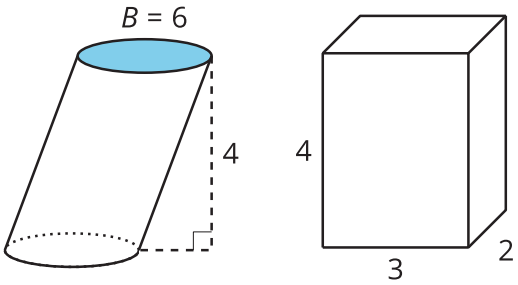
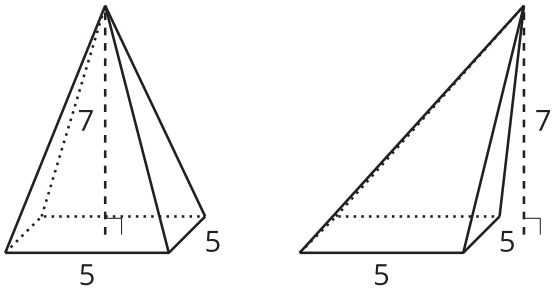
These two pyramids also have equal volumes. Their bases are congruent, and they have the same height. Shifting a solid from right to oblique doesn't change its volume.