Card Sort: How Did This Get There?

Card 1

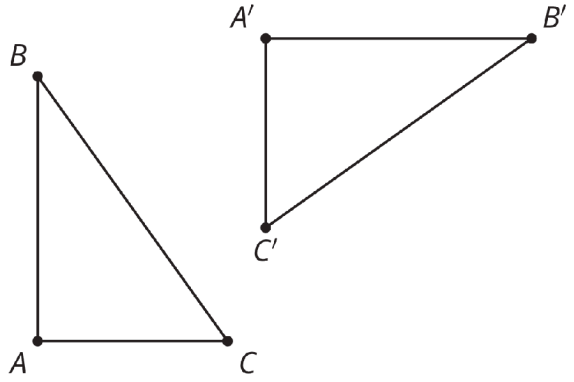

Card Sort: How Did This Get There?

Card 2

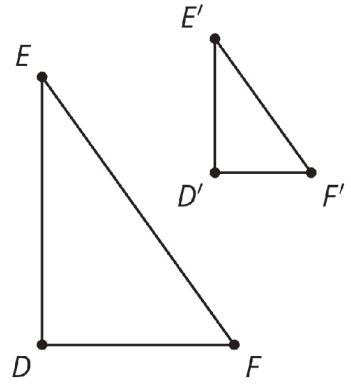

Card Sort: How Did This Get There?

Card 3

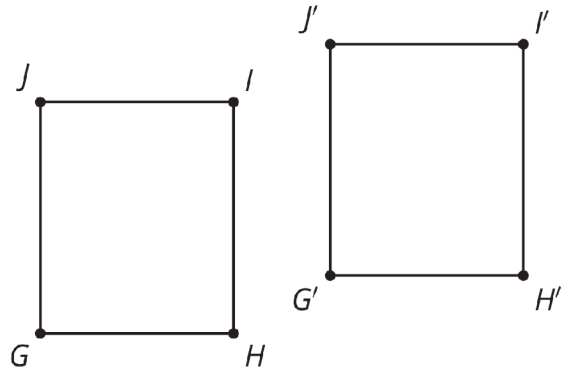

Card Sort: How Did This Get There?

Card 4

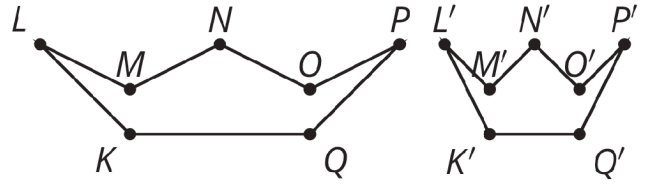

Card Sort: How Did This Get There?

Card 5

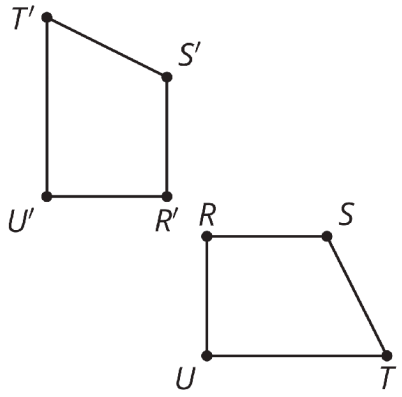

Card Sort: How Did This Get There?

Card 6

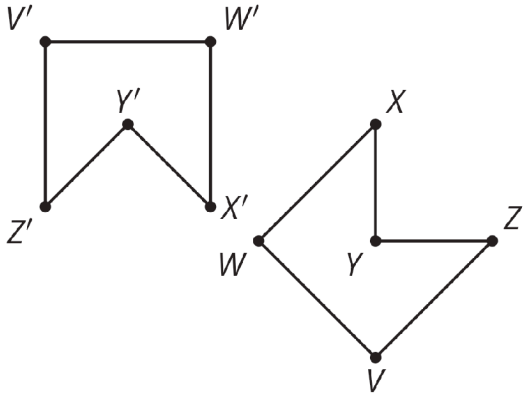

CC BY NC 2024 Illustrative Mathematics®