Unit 4, Lesson 15

# Volume of Prisms

Let's look at the volume of prisms that have fractional measurements.

## 15.1 A Box of Cubes

1. How many cubes with an edge length of 1 inch fill this box?

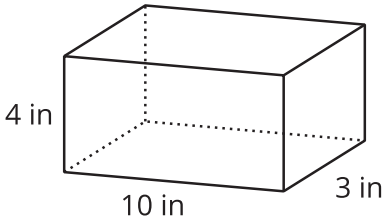


2. If the cubes had an edge length of 2 inches, would you need more or fewer cubes to fill the box? Explain your reasoning.

3. If the cubes had an edge length of $\frac{1}{2}$ inch, would you need more or fewer cubes to fill the box? Explain your reasoning.


CC BY NC Illustrative Mathematics, based on IM 6–8 Math, CC BY Open Up Resources.

## 15.2 Cubes with Fractional Edge Lengths

1. Diego says that 108 cubes with an edge length of $\frac{1}{3}$ inch are needed to fill a rectangular prism that is 3 inches by 1 inch by $1\frac{1}{3}$ inch.

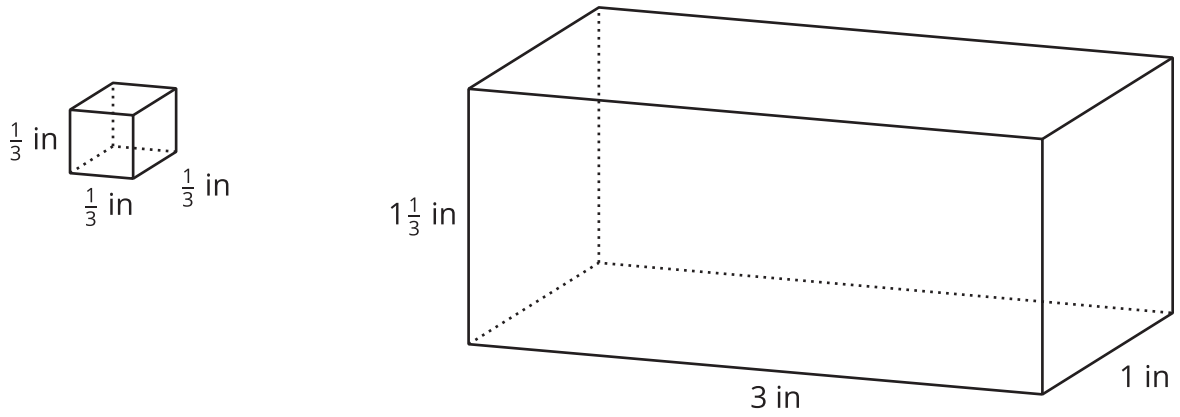


a. Explain or show how this is true.

b. What is the volume, in cubic inches, of the rectangular prism? Explain or show your reasoning.


CC BY NC Illustrative Mathematics, based on IM 6–8 Math, CC BY Open Up Resources.

2. Lin and Noah are packing small cubes into a larger cube with an edge length of $1\frac{1}{2}$ inches. Lin is using cubes with an edge length of $\frac{1}{2}$ inch, and Noah is using cubes with an edge length of $\frac{1}{4}$ inch.

   a. Who would need more cubes to fill the $1\frac{1}{2}$-inch cube? Be prepared to explain your reasoning.

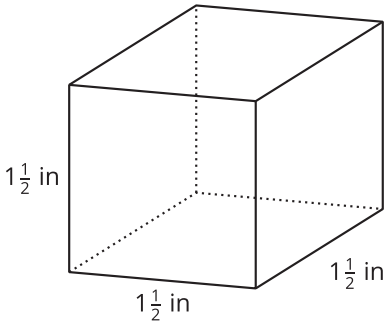


   b. If Lin and Noah each use their small cubes to find the volume of the larger $1\frac{1}{2}$-inch cube in cubic inches, will they get the same answer? Explain or show your reasoning.


CC BY NC Illustrative Mathematics, based on IM 6–8 Math, CC BY Open Up Resources.

## Are you ready for more?

1. Find the area of a rectangle with side lengths $\frac{1}{2}$ and $\frac{2}{3}$.

2. Find the volume of a rectangular prism with side lengths $\frac{1}{2}$, $\frac{2}{3}$, and $\frac{3}{4}$.

3. What do you think happens if we keep multiplying fractions $\frac{1}{2} \cdot \frac{2}{3} \cdot \frac{3}{4} \cdot \frac{4}{5} \cdot \frac{5}{6} \ldots$?

4. Find the area of a rectangle with side lengths $\frac{1}{1}$ and $\frac{2}{1}$.

5. Find the volume of a rectangular prism with side lengths $\frac{1}{1}$, $\frac{2}{1}$, and $\frac{1}{3}$.

6. What do you think happens if we keep multiplying fractions $\frac{1}{1} \cdot \frac{2}{1} \cdot \frac{1}{3} \cdot \frac{4}{1} \cdot \frac{1}{5} \ldots$?


CC BY NC Illustrative Mathematics, based on IM 6–8 Math, CC BY Open Up Resources.

## 15.3 Fish Tank

A nature center has a fish tank in the shape of a rectangular prism. The tank is 10 feet long, $8\frac{1}{4}$ feet wide, and 6 feet tall.

1. What is the volume of the tank in cubic feet? Show your reasoning.

2. One day, a caretaker filled $\frac{4}{5}$ of the tank with water. What was the volume of the water in the tank, in cubic feet? What was the height of the water in the tank? Show your reasoning.


CC BY NC Illustrative Mathematics, based on IM 6–8 Math, CC BY Open Up Resources.

## Are you ready for more?

Clare's recipe for banana bread won't fit in her favorite pan. The pan is $8\frac{1}{2}$ inches by 11 inches by 2 inches. The batter fills the pan to the very top, and when baking, the batter spills over the sides. To avoid spills, there should be about an inch between the top of the batter and the rim of the pan.

Clare has another rectangular pan. It has a base with an area of 81 square inches and a height of $2\frac{1}{2}$ inches. If she uses this pan, will the batter spill over during baking?

## Lesson 15 Summary

If a rectangular prism has edge lengths $a$ units, $b$ units, and $c$ units, the volume is the product of $a$, $b$, and $c$.

$$V = a \cdot b \cdot c$$

This means that if we know the *volume* and *two edge lengths*, we can divide to find the *third* edge length.

Suppose the volume of a rectangular prism is $400\frac{1}{2}$ cm$^3$, one edge length is $\frac{11}{2}$ cm, another is $6$ cm, and the third edge length is unknown. We can write a multiplication equation to represent the situation:

$$\frac{11}{2} \cdot 6 \cdot ? = 400\frac{1}{2}$$

We can find the third edge length by dividing:

$$400\frac{1}{2} \div \left(\frac{11}{2} \cdot 6\right) = ?$$


CC BY NC Illustrative Mathematics, based on IM 6–8 Math, CC BY Open Up Resources.