Unit 7, Lesson 5

The Pythagorean Identity (Part 1)

Let's learn more about cosine and sine.

5.1 Circle Equations

Here is a circle that is centered at $(0, 0)$ and that has a radius of 1 unit.

What are the exact coordinates of P if P is rotated counterclockwise $\frac{\pi}{3}$ radians from the point $(1, 0)$? Explain or show your reasoning.

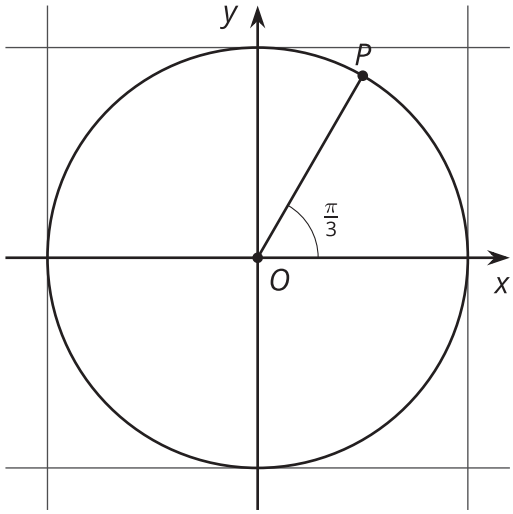

5.2 Cosine, Sine, and the Unit Circle

What are the exact coordinates of point Q if it is rotated $\frac{2\pi}{3}$ radians counterclockwise from the point $(1, 0)$? Explain or show your reasoning.

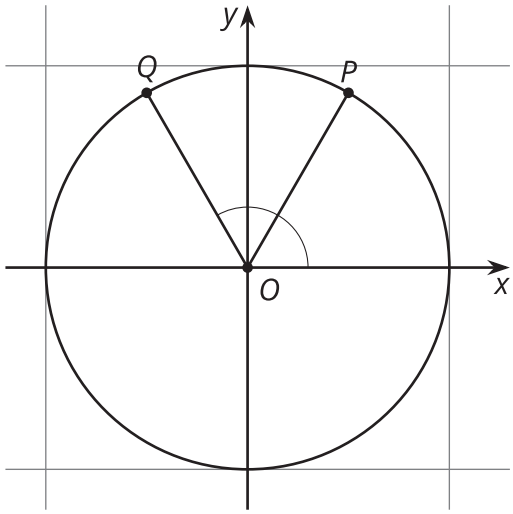

5.3 A New Identity

1. Is the point $\left(-0.5, \sin(\frac{4\pi}{3})\right)$ on the unit circle? Explain or show your reasoning.

2. Is the point $\left(-0.5, \sin(\frac{5\pi}{6})\right)$ on the unit circle? Explain or show your reasoning.

3. Suppose that $\sin(\theta) = -0.5$ and that θ is in Quadrant IV. What is the exact value of $\cos(\theta)$? Explain or show your reasoning.

Are you ready for more?

Show that if θ is an angle between 0 and 2π and neither $\cos(\theta) = 0$ nor $\sin(\theta) = 0$, then it is impossible for the sum of $\cos(\theta)$ and $\sin(\theta)$ to be equal to 1.

Lesson 5 Summary

Let's say we have a point P with coordinates (a, b) on the unit circle, like the one shown here:

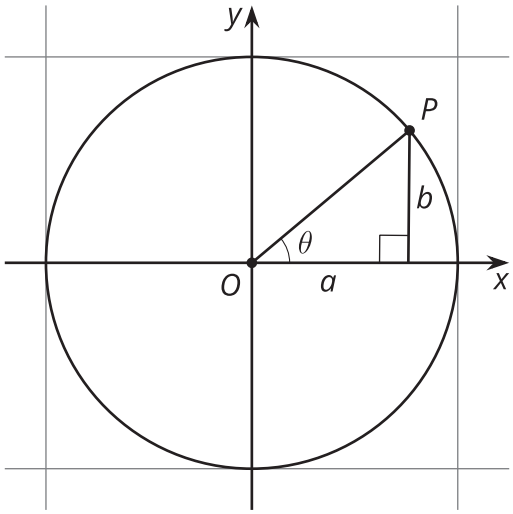

Using the Pythagorean Theorem, we know that $a^2 + b^2 = 1$. We also know this is true using the equation for a circle with radius 1 unit, $x^2 + y^2 = 1^2$, which is true for the point (a, b) since it is on the circle.

Another way to write the coordinates of P is to use the angle θ, which gives the location of P on the unit circle relative to the point $(1, 0)$. Thinking of P this way, its coordinates are $(\cos(\theta), \sin(\theta))$. Since $a = \cos(\theta)$ and $b = \sin(\theta)$, we can return to the Pythagorean Theorem and say that $\cos^2(\theta) + \sin^2(\theta) = 1$ is also true.

What if θ were a different angle and P wasn't in Quadrant I? It turns out that no matter the quadrant, the coordinates of any point on the unit circle given by an angle θ are $(\cos(\theta), \sin(\theta))$. In fact, the definitions of $\cos(\theta)$ and $\sin(\theta)$ are the x- and y-coordinates of the point on the unit circle θ radians counterclockwise from $(1, 0)$. Up until today, we've only been using the Quadrant I values for cosine and sine to find side lengths of right triangles, which are always positive.

This revised definition of cosine and sine means that $\cos^2(\theta) + \sin^2(\theta) = 1$ is true for all values of θ defined on the unit circle and is known as the **Pythagorean Identity**.