Scope and Sequence for Integrated Math 1

The course begins with students using a compass and a straightedge to improve their logical-reasoning skills in a geometric setting. Students gradually build a toolkit of constructions that lead to rigid transformations and showing congruence of figures. In particular, they examine conditions needed to guarantee triangle congruence.

Students describe the shape of data distributions, using measures of center and variability. This leads them to model how multiple variables are related, using linear equations and systems of linear equations. Students write, evaluate, graph, and solve equations, explaining and validating their reasoning with increased precision.

By examining how transformations affect graphs, students connect their geometric understanding of rigid transformations to their understanding of linear equations on a coordinate plane. These insights lead into a unit on two-variable statistics in which students examine relationships between variables, using two-way tables, scatter plots, and linear models. Students continue their exploration of graphs by solving linear inequalities and systems of linear inequalities to represent constraints in situations.

Shifting focus, students deepen their understanding of functions by representing, interpreting, and communicating about them, using function notation, domain and range, average rate of change, and features of graphs. They also see categories of functions, starting with linear functions (including their inverses) and piecewise-defined functions (including absolute-value functions), followed by exponential functions. For each function type, students investigate real-world contexts, look closely at the structural attributes of the function, and analyze how these attributes are expressed in different representations.

Within the classroom activities, students have opportunities to engage in aspects of mathematical modeling. Additionally, modeling prompts are provided for use throughout the course, offering opportunities for students to engage in the full modeling cycle. Implement these in a variety of ways. Please see the *Mathematics Modeling Prompts* section of this Course Guide for a more detailed explanation.

Geometry Reference Chart

In order to write convincing arguments, students need to support their statements with facts. The reference chart is a way to keep track of those facts for future reference when students are trying to prove new facts. At the beginning of the course, the chart is blank. Students continue adding entries and referring to them in the geometry units of this course.

Print charts double sided to save paper. There should be a system for students to keep track of their charts (for example, hole punch and keep in a binder, or staple and tuck in the front of a notebook or the back of the workbook).

Each entry includes a statement, a diagram, a type and the date. A statement can be one of these three types: assertion, definition, or theorem. An assertion is an observation that seems to be true but is not proven. Sometimes assertions are not proven, because they are axioms or because the proof is beyond the scope of this course. The chart includes the most essential definitions. If there are additional definitions from previous courses that students would benefit from, feel free to add them. For example, it is assumed that students recall the definition of “isosceles.” If this is not the case, that would be a useful definition to record. Here are some entries to show the chart’s structure:

date, type	statement	diagram
[date] assertion	A **rigid transformation** is a translation, reflection, rotation, or any sequence of the three. Rigid transformations take lines to lines, angles to angles of the same measure, and segments to segments of the same length.	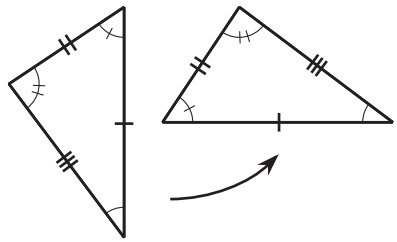
[date] definition	Two figures are **congruent** if there is a sequence of translations, rotations, and reflections that takes one figure exactly onto the other. The second figure is called the image of the rigid transformation.	$\triangle EDC \cong \triangle E'D'C'$ 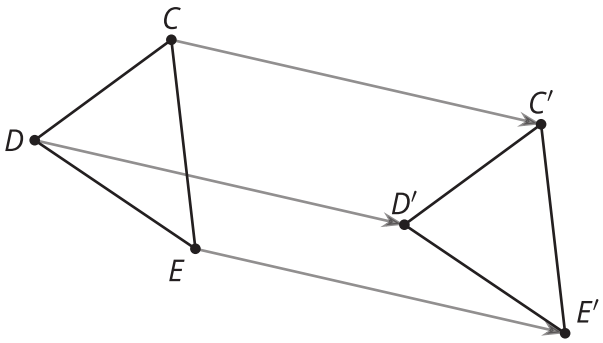
[date] theorem	Translations take lines to parallel lines or to themselves.	$m \parallel m'$ 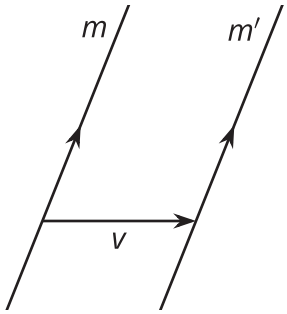

Students are not expected to record all of their observations in the chart. Sometimes students' conjectures will be proven in a subsequent lesson and added later as theorems rather than assertions. Other times students prove something that they will not need to use again. Students are welcome to use any proven statement in a later proof, but the reference chart is designed to be as concise as possible so it is a more useful reference than students' entire notebooks.

The intention is for students to be able to use their reference charts at any time, including during assessments. The goal is to learn to apply statements precisely, not to memorize. Some teachers ask students to make a tally mark each time they use a statement in the chart to justify a response. This allows students to see which are the most powerful statements and teachers to see how students are using their charts. Including the date will help students to know if they missed a row when they were absent or to locate a statement if they remember approximately how long ago they added it.

In addition to the blank reference chart, there is also a scaffolded version of the reference chart. The scaffolded version is intended to provide access for students with disabilities (language based, low vision, motor challenges) and English

learners. In this version, students are provided with sentence frames for the “statement” column. The diagrams are also partially provided so students can focus on annotating key information. There is a teacher version of the chart in which the words needed to fill in the blanks and the missing annotations are highlighted.

Notation

Within student-facing text, these materials use words rather than symbols to allow students to focus on content instead of translating the meanings of symbols while reading. To increase exposure to different notation, images with information that is given by tick marks or arrows include a caption with the symbolic notation (like $\overline{AB} \cong \overline{CD}$). Teachers are encouraged to use the symbolic notation when recording student responses, since that is an appropriate use of shorthand.

Unit 1: Constructions and Rigid Transformations

This unit begins with constructions, then continues to rigid transformations. In grade 8, students determined the angle-preserving and length-preserving properties of rigid transformations experimentally, mostly with the help of a coordinate grid.

Constructions play a significant role in the logical foundation of geometry. A focus of this unit is for students to explore properties of shapes in the plane without the aid of given measurements. At this point, students have worked so much with numbers, equations, variables, coordinate grids, and other quantifiable structures that it may come as a surprise just how far they can push concepts in geometry without measuring distances or angles.

At the beginning of the unit, students have the opportunity to move from informal explorations of lines and arcs to generating conjectures and writing justifications based on their constructions.

Next, students recall transformations from previous grades and learn to create rigid motions using construction tools instead of a grid. This leads to rigorous definitions of rotations, reflections, and translations without reference to a coordinate grid.

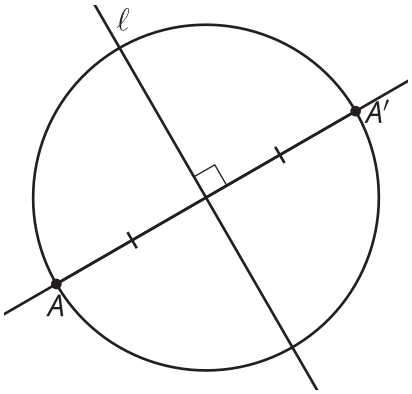

Starting in the second section, a blank reference chart is provided for students, and a completed reference chart is provided for teachers. The purpose of the reference chart is to be a resource for students to refer to as they make formal arguments. Students will continue adding to it throughout the course. Refer to the Course Guide for more information.

These materials use words rather than symbolic notation to allow students to focus on the content. By using words, students do not need to translate the meaning of the symbol while reading. To increase exposure to different notations, images with given information marked using ticks, right angle marks, or arrows also have a caption with the symbolic notation ($\overline{AB} \cong \overline{AC}$, $\overline{AB} \perp \overline{AC}$, or $\overline{AB} \parallel \overline{AC}$). Feel free to use the symbolic notation when recording student responses, as that is an appropriate use of shorthand.

Students have the opportunity to choose appropriate tools (MP5) in nearly every lesson as they select among the options in their geometry toolkit as well as dynamic geometry software. For this reason, this math practice is only highlighted in lessons where it's particularly salient.

Section A: Constructions

- Lesson 1: Build It
- Lesson 2: Constructing Patterns
- Lesson 3: Construction Techniques 1: Perpendicular Bisectors
- Lesson 4: Construction Techniques 2: Equilateral Triangles
- Lesson 5: Construction Techniques 3: Perpendicular Lines and Angle Bisectors
- Lesson 6: Construction Techniques 4: Parallel and Perpendicular Lines
- Lesson 7: Construction Techniques 5: Squares
- Lesson 8: Using Technology for Constructions
- Lesson 9: Speedy Delivery

Section B: Defining Rigid Transformations

- Lesson 10: Rigid Transformations
- Lesson 11: Defining Reflections
- Lesson 12: Defining Translations
- Lesson 13: Incorporating Rotations
- Lesson 14: Defining Rotations

Section C: Working with Rigid Transformations

- Lesson 15: Symmetry
- Lesson 16: More Symmetry
- Lesson 17: Working with Rigid Transformations
- Lesson 18: Practicing Point-by-Point Transformations

Section D: Let's Put It to Work

- Lesson 19: Now What Can You Build?

Unit 2: Congruence

In this unit, students prove a variety of figures congruent. They start with segments (2 vertices), then move on to triangles (3 vertices). Before starting this unit, students are familiar with rigid transformations and congruence from a previous unit. The triangle congruence theorems in this unit lay the foundation for triangle similarity in a later course.

The first section focuses on establishing congruence. Students recall from middle school that if two figures are congruent, then each pair of corresponding parts of the figures are also congruent. Next, students use rigid transformations to justify the triangle congruence theorems of Euclidean geometry: Side-Side-Side Triangle Congruence, Side-Angle-Side Triangle Congruence, and Angle-Side-Angle Triangle Congruence. Students justify that for each set of criteria, a sequence of rigid motions exists that will take one triangle onto the other.

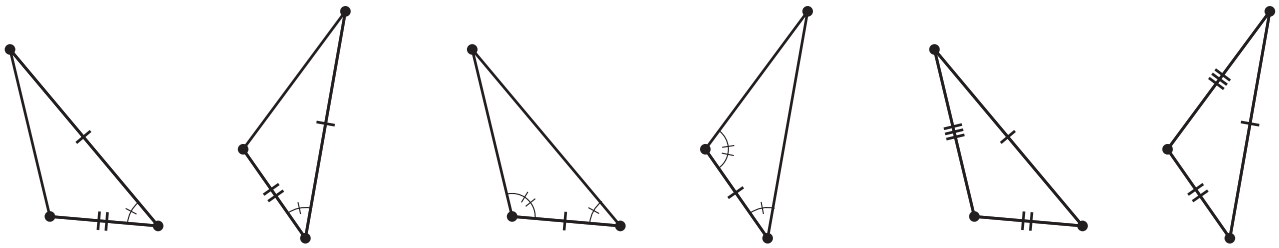

In a previous unit, students began justifying their responses. In this unit, students write more rigorous proofs. At first, students may use imprecise language to convey their ideas. Throughout the unit they will read examples, practice explaining ideas to a partner, and build a reference of precise statements to use in future proofs. Writing proofs doesn't only mean providing the reasons for someone else's claim, constructing a viable argument includes writing conjectures and detailing given information. Students write congruence proofs using transformations so the resulting theorems can be used in future work without repeating the argument.

The proofs in these materials are all written in narrative form. The narrative format matches the discussion students might have to use to convince their partner, and it also matches the way mathematicians write proofs. While students may use other formats to support their organization, it is important that students can see the flow of reasoning that exists in a well-written proof. A two-column proof can be thought of like an outline for an essay. Outlines help organize thoughts, but an outline is less persuasive than a well-written essay. Students should learn to write a well-written justification in the form of a narrative proof.

Students are learning ways to express their reasoning more formally. Expect students to put together explanations with various levels of formality. Mastery of proof writing is not expected by the end of this unit. Students will have more practice writing proofs in a later course.

Note on materials: For most activities in this unit, students have access to a geometry toolkit that includes many tools that students can choose from strategically: compass and straightedge, tracing paper, colored pencils, and scissors. In some lessons, students will also need access to a ruler and protractor. Finally, there are some activities that are best done using dynamic geometry software, and these lessons indicate that digital materials are preferred. Students will continue to use and add to their reference charts. The completed reference chart for this unit is provided for teacher reference.

Section A: Congruent Figures

- Lesson 1: Congruent Parts, Part 1
- Lesson 2: Congruent Parts, Part 2
- Lesson 3: Congruent Triangles, Part 1
- Lesson 4: Congruent Triangles, Part 2
- Lesson 5: Points, Segments, and Zigzags

Section B: Triangle Congruence Theorems

- Lesson 6: Side-Angle-Side Triangle Congruence
- Lesson 7: Angle-Side-Angle Triangle Congruence
- Lesson 8: The Perpendicular Bisector Theorem
- Lesson 9: Side-Side-Side Triangle Congruence

- Lesson 10: Practicing Proofs
- Lesson 11: Side-Side-Angle (Sometimes) Congruence

Unit 3: One-Variable Statistics

In this unit, students collect, display, and analyze data using statistics, such as mean, median, interquartile range, and standard deviation.

In grades 6–8, students used histograms, dot plots, and box plots as a way to summarize data and worked with basic measures of center (mean and median) as well as measures of variability (mean absolute deviation and interquartile range). These concepts are revisited in the first two sections of this unit, but with a focus on interpretation and what they reveal about the data in addition to the mechanics of constructing the data displays.

The optional third section is available to familiarize students with spreadsheets and technology that will be used to calculate statistics, such as mean, median, quartiles, and standard deviation, as well as create data displays.

The fourth section introduces additional ways to interpret data using standard deviation and outliers. Students finish the unit by using these tools to compare related data sets using measures of center and measures of variability.

The last lesson gives students a chance to practice their skills by posing a statistical question, designing an experiment, collecting data, and analyzing their data.

Because the first half of the unit mostly revisits material from middle school, a Mid-Unit Assessment is not included in this unit. The *Cool-downs* and *Checkpoints* can be used to monitor student understanding.

In this unit, only the population standard deviation is used. Sample standard deviation is introduced in a later course.

GeoGebra's spreadsheets are chosen for their versatility for the on-level mathematics in this course. While other spreadsheet programs have additional functionality and uses, they are limited in other ways. That said, please adapt the materials to the needs of your students.

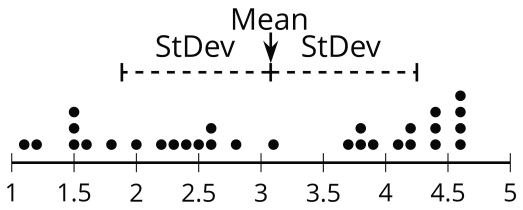

Section A: Getting to Know You

- Lesson 1: Getting to Know You
- Lesson 2: Data Representations
- Lesson 3: A Gallery of Data

Section B: Distribution Shapes

- Lesson 4: The Shape of Distributions
- Lesson 5: Calculating Measures of Center and Variability

Section C: How to Use Spreadsheets

- Lesson 6: Mystery Computations
- Lesson 7: Spreadsheet Computations
- Lesson 8: Spreadsheet Shortcuts

Section D: Manipulating Data

- Lesson 9: Technological Graphing
- Lesson 10: The Effect of Extremes
- Lesson 11: Comparing and Contrasting Data Distributions
- Lesson 12: Standard Deviation
- Lesson 13: More Standard Deviation
- Lesson 14: Outliers
- Lesson 15: Comparing Data Sets

Section E: Let's Put It to Work

- Lesson 16: Analyzing Data

Unit 4: Linear Equations and Systems

In this unit, students examine solving and graphing linear equations and systems of linear equations.

The unit builds on learning from middle school when students used variables to write equations, manipulated equations using valid moves such as the distributive property, and solved basic systems of linear equations using graphs and substitution.

In the first section, students recall writing equations to represent situations. In the second section, they use valid moves to write equivalent equations that can be used to solve for unknown values or to isolate variables. The third section examines solving systems of equations using graphs, substitution for variables, and elimination of variables. Students use their understanding of writing equivalent equations to understand why each of the methods works for finding the solution.

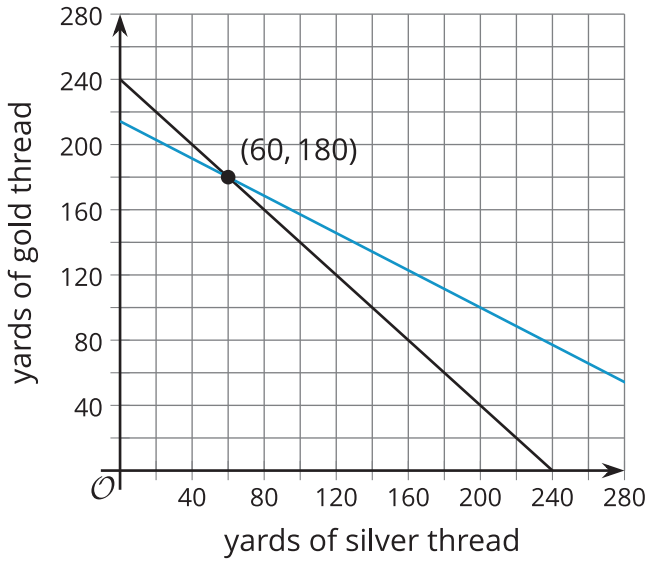

Section A: Writing and Modeling with Equations

- Lesson 1: Planning a Party
- Lesson 2: Writing Equations to Model Relationships (Part 1)
- Lesson 3: Writing Equations to Model Relationships (Part 2)

- Lesson 4: Equations and Their Solutions
- Lesson 5: Equations and Their Graphs

Section B: Manipulating Equations and Understanding Their Structure

- Lesson 6: Equivalent Equations
- Lesson 7: Explaining Steps for Rewriting Equations
- Lesson 8: Which Variable to Solve for? (Part 1)
- Lesson 9: Which Variable to Solve for? (Part 2)
- Lesson 10: Connecting Equations to Graphs (Part 1)
- Lesson 11: Connecting Equations to Graphs (Part 2)

Section C: Systems of Linear Equations in Two Variables

- Lesson 12: Writing and Graphing Systems of Linear Equations
- Lesson 13: Solving Systems by Substitution
- Lesson 14: Solving Systems by Elimination (Part 1)
- Lesson 15: Solving Systems by Elimination (Part 2)
- Lesson 16: Solving Systems by Elimination (Part 3)
- Lesson 17: Systems of Linear Equations and Their Solutions

Section D: Let's Put It to Work

- Lesson 18: Asking about Solving Systems
- Lesson 19: Linear Patterns

Unit 5: Coordinate Geometry

Prior to beginning this unit, students have studied geometric figures not described by coordinates. Students have seen figures on a grid (notably transformations in grade 8) and lines on a coordinate plane (in previous units). This unit brings together students' experience from previous years and their new understanding from this course, for an in-depth study of the coordinate geometry of lines and polygons.

The first few lessons examine transformations in the plane. Students encounter a new coordinate transformation notation that connects transformations to functions. Students transform figures using rules, such as $(x, y) \rightarrow (x + 3, y + 1)$, and connect the geometric definitions of reflections and dilations to coordinate rules that produce them. Students prove that objects are similar or congruent, using reasoning including distance (via the Pythagorean Theorem) and definitions of transformations.

The next section focuses on relationships between lines. Students build the point-slope form of the equation of a line. They then write and prove conjectures about slopes of parallel and perpendicular lines, applying concepts of transformations in the proofs. They also create equations that are parallel or perpendicular to another line, through given points.

Students next look deeply at the concept of distance between points in a coordinate plane. They move from finding the distance between specific points to generalizing an equation for the distance between any two points in a plane. They use this equation to find the lengths of line segments and the side lengths of figures in a plane. Finally, students apply these ideas to classifying quadrilaterals as parallelograms, rectangles, rhombuses, and squares.

In the final lesson, students apply their understanding of slope and distances in a plane, as they explore the Nazca lines

in a real-world situation.

Students will continue to use and add to their reference charts. The completed reference chart for this unit is provided for teacher reference.

Section A: Transformations in the Plane

- Lesson 1: Rigid Transformations in a Plane
- Lesson 2: Transformations as Functions
- Lesson 3: Types of Transformations

Section B: Theorems about Lines

- Lesson 4: Equations of Lines
- Lesson 5: Parallel Lines in the Plane
- Lesson 6: Perpendicular Lines in the Plane
- Lesson 7: It's All on the Line

Section C: Distances on the Plane

- Lesson 8: Distances and Triangles
- Lesson 9: Classifying with Slope
- Lesson 10: Lines in Triangles

Section D: Let's Put It to Work

- Lesson 11: Applying Area and Perimeter on the Plane

Unit 6: Two-Variable Statistics

In this unit, students use statistical methods to look for associations in bivariate data. The unit begins with students analyzing categorical data arranged in two-way tables. Students use the relative frequencies of the combinations of those categorical variables to check for evidence of any associations in the data.

The unit then transitions to bivariate numerical data, which are visualized using scatter plots and lines of best fit. Students use technology to compute the lines of best fit and observe how well the linear models match the data. Residuals and correlation coefficients are used to quantify the goodness of fit for linear models.

The unit closes with an exploration of the difference between correlation and causal relationships, and it is also an opportunity to apply this learning to areas of interest, like anthropology and sports.

In grade 8, students informally constructed scatter plots and lines of fit, noticed linear patterns, and observed associations in categorical data using two-way tables. In this unit, students build on this previous knowledge by assessing how well a linear model matches the data by using residuals as well as the correlation coefficient for best-fit lines (found using technology).

There are opportunities to practice concepts from a previous unit by interpreting the slope and intercept of a linear model in context as well as using the models to predict one variable given information about the other.

$y = 0.46x + 0.92$

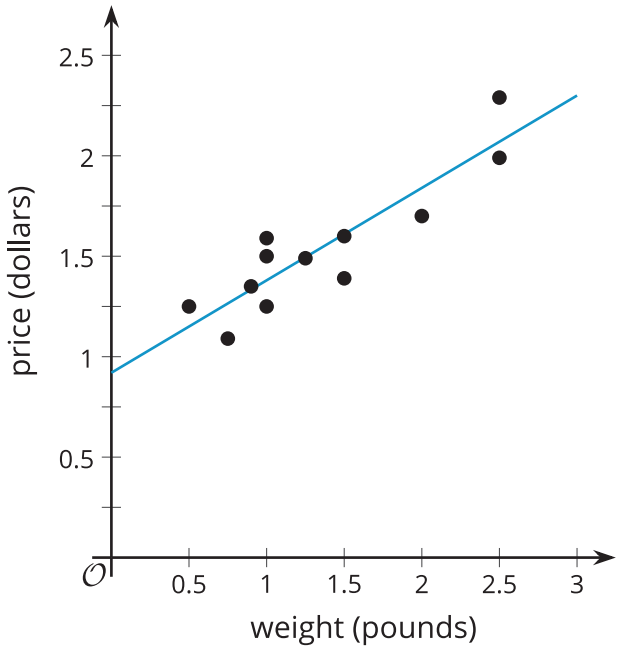

Section A: Two-Way Tables

- Lesson 1: Two-Way Tables
- Lesson 2: Relative Frequency Tables
- Lesson 3: Associations in Categorical Data

Section B: Scatter Plots

- Lesson 4: Linear Models
- Lesson 5: Fitting Lines
- Lesson 6: Residuals

Section C: Correlation Coefficients

- Lesson 7: The Correlation Coefficient
- Lesson 8: Using the Correlation Coefficient
- Lesson 9: Causal Relationships

Section D: Let's Put It to Work

- Lesson 10: Fossils and Flags

Unit 7: Linear Inequalities and Systems

In this unit, students examine solving and graphing linear inequalities and systems of linear inequalities.

The unit builds on concepts from middle school when students write and solve inequalities by reasoning about quantities. It further builds on concepts from an earlier unit in which students solve linear equations and systems of equations by writing equivalent equations.

To start, students solve linear inequalities in one variable and graph the solutions on a number line by writing equivalent inequalities. In the second section, they solve linear inequalities with two variables by looking at the related equation, graphing it on a coordinate plane, and testing points on either side of the line to determine the solution region. The third section is about solving systems of linear inequalities considering multiple linear inequalities as conditions for situations and finding a solution region that satisfies all of the inequalities.

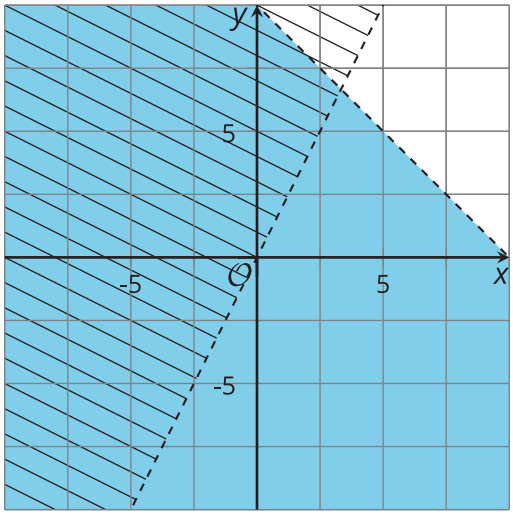

Section A: Linear Inequalities in One Variable

- Lesson 1: Representing Situations with Inequalities
- Lesson 2: Solutions to Inequalities in One Variable
- Lesson 3: Writing and Solving Inequalities in One Variable

Section B: Linear Inequalities in Two Variables

- Lesson 4: Graphing Linear Inequalities in Two Variables (Part 1)
- Lesson 5: Graphing Linear Inequalities in Two Variables (Part 2)
- Lesson 6: Solving Problems with Inequalities in Two Variables

Section C: Systems of Linear Inequalities in Two Variables

- Lesson 7: Solutions to Systems of Linear Inequalities in Two Variables
- Lesson 8: Solving Problems with Systems of Linear Inequalities in Two Variables
- Lesson 9: Modeling with Systems of Inequalities in Two Variables

Unit 8: Functions

In this unit, students expand and deepen their understanding of functions. They begin with a reminder of the definition of a function (a rule that assigns exactly one output to each input) that they previously saw in grade 8, then get familiar with function notation and use it to compare and analyze functions, write rules for functions, and solve for inputs or outputs.

Then, students explore graphs of functions to describe features such as “maximum,” “minimum,” “intercepts,” “increasing,” “decreasing,” and “average rate of change” and make connections between the graphs and real-life situations. They use situations to discuss the domain and range of a function and make sense of piecewise-defined functions. In particular, students examine the absolute value function and some basic transformations of it. Later,

students explore inverses of linear functions as a way to find corresponding input values when output values are known. Throughout the unit, students have chances to mathematically model real-world situations.

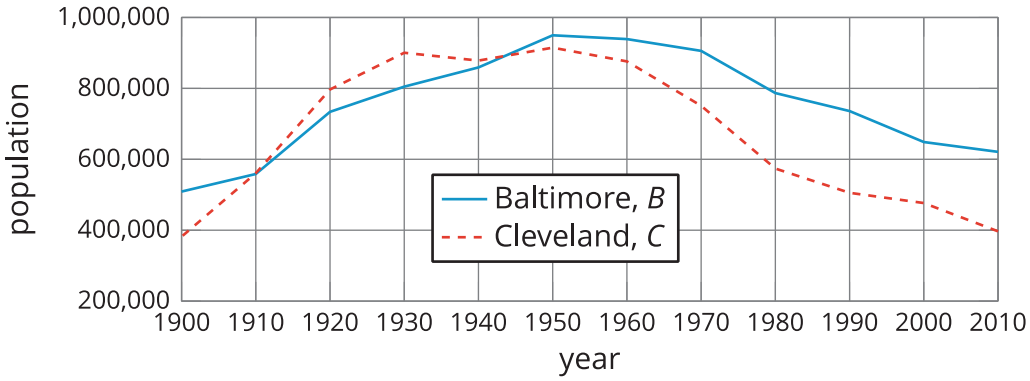

Section A: Functions and Their Representations

- Lesson 1: Describing and Graphing Situations
- Lesson 2: Function Notation
- Lesson 3: Interpreting and Using Function Notation
- Lesson 4: Using Function Notation to Describe Rules (Part 1)
- Lesson 5: Using Function Notation to Describe Rules (Part 2)

Section B: Analyzing and Creating Graphs of Functions

- Lesson 6: Features of Graphs
- Lesson 7: Using Graphs to Find Average Rate of Change
- Lesson 8: Interpreting and Creating Graphs
- Lesson 9: Comparing Graphs

Section C: A Closer Look at Inputs and Outputs

- Lesson 10: Domain and Range (Part 1)
- Lesson 11: Domain and Range (Part 2)
- Lesson 12: Piecewise Functions

Section D: Absolute Value

- Lesson 13: Absolute Value Functions (Part 1)
- Lesson 14: Absolute Value Functions (Part 2)
- Lesson 15: Solving Equations with Absolute Values
- Lesson 16: Solving Inequalities with Absolute Values

Section E: Inverse Functions

- Lesson 17: Inverse Functions
- Lesson 18: Finding and Interpreting Inverse Functions
- Lesson 19: Writing Inverse Functions to Solve Problems

Section F: Let's Put It to Work

- Lesson 20: Using Functions to Model Battery Power

Unit 9: Introduction to Exponential Functions

In this unit, students build on their understanding of linear functions, properties of exponents, and percent change to explore exponential relationships. Students learn that exponential relationships are characterized by a constant quotient over equal intervals, and compare it to linear relationships which are characterized by a constant difference over equal intervals. They encounter contexts that change exponentially. These contexts are presented verbally and with tables and graphs. They construct equations and use them to model situations and solve problems. At first, students investigate these exponential relationships without using function notation and language so that they can focus on gaining an appreciation for critical properties and characteristics of exponential relationships.

Later, students view these relationships as functions and employ the notation and terminology of functions. They study graphs of exponential functions both in terms of contexts they represent and abstract functions that don't represent a particular context, observing the effect of different values of a and b on the graph of the function f represented by $f(x) = ab^x$.

The contexts used early in this unit lead to functions where the domain is the integers, then students explore fractional exponents and their connection to roots.

Note on materials: Students should have access to a calculator with an exponent button throughout the unit. Access to graphing technology is necessary for some activities and encouraged throughout the unit. Examples of graphing technology include a handheld graphing calculator, a computer with a graphing calculator application installed, or an internet-enabled device with access to a site like desmos.com/calculator or geogebra.org/graphing. Interactive applets are embedded throughout, and a graphing calculator tool is accessible in the Math Tools in the digital version.

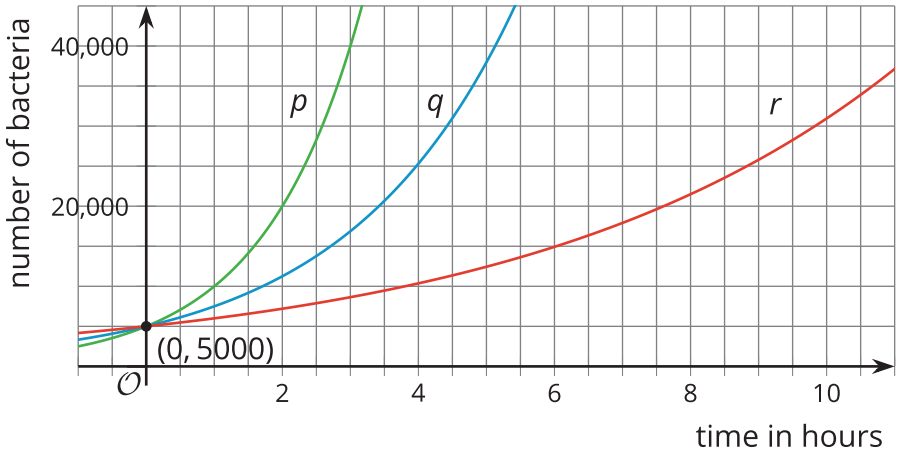

Section A: Looking at Growth

- Lesson 1: Growing and Growing
- Lesson 2: Patterns of Growth

Section B: A New Kind of Relationship

- Lesson 3: Representing Exponential Growth
- Lesson 4: Representing Exponential Decay
- Lesson 5: Understanding Decay
- Lesson 6: Analyzing Graphs

- Lesson 7: Using Negative Exponents

Section C: Exponential Functions

- Lesson 8: Exponential Situations as Functions
- Lesson 9: Interpreting Exponential Functions
- Lesson 10: Looking at Rates of Change
- Lesson 11: Modeling Exponential Behavior
- Lesson 12: Reasoning about Exponential Graphs (Part 1)
- Lesson 13: Reasoning about Exponential Graphs (Part 2)

Section D: Percent Growth and Decay

- Lesson 14: Recalling Percent Change
- Lesson 15: Functions Involving Percent Change
- Lesson 16: Compounding Interest
- Lesson 17: Different Compounding Intervals
- Lesson 18: Expressed in Different Ways

Section E: Comparing Linear and Exponential Functions

- Lesson 19: Which One Changes Faster?
- Lesson 20: Changes over Equal Intervals

Section F: Let's Put It to Work

- Lesson 21: Predicting Populations

Pacing Guide

Number of days includes assessments. Upper bound of range includes optional lessons. Does not include time for modeling prompts.

	Math 1	Math 2	Math 3
week 1 week 2 week 3 week 4	Unit 1 (MA) Constructions and Rigid Transformations 20–22 days Optional Lessons: 8, 18	Unit 1 Convincing Arguments 16 days Optional lessons: none	Unit 1 Solid Geometry 21–22 days Optional Lessons: 10
week 5 week 6 week 7	Unit 2 Congruence 12–13 days Optional Lesson: 11	Unit 2 Similarity 17–20 days Optional Lessons: 2, 10, 14	Unit 2 Polynomial Functions 17 days Optional Lessons: none
week 8 week 9 week 10	Unit 3 One-Variable Statistics 13–18 days Optional Lessons: 2, 5, 6, 7, 8	Unit 3 Right Triangle Trigonometry 14 days Optional Lessons: none	Unit 3 Rationals, Radicals, and Identities 16–18 days Optional Lessons: 10, 16
week 11 week 12 week 13 week 14	Unit 4 Linear Equations and Systems 16–21 days Optional Lessons: 2, 4, 5, 18, 19	Unit 4 (MA) Introduction to Quadratic Functions 19–22 days Optional Lesson: 13, 14, 16	Unit 4 (MA) Exponential Functions and Equations 21–24 days Optional Lessons: 2, 7, 23
week 15 week 16 week 17	Unit 5 Coordinate Geometry 12–13 days Optional Lessons: 10	Unit 5 (MA) Quadratic Equations 26–27 days Optional Lessons: 18	Unit 5 Transformations of Functions 17 days Optional Lessons: none
week 18 week 19 week 20	Unit 6 Two-Variable Statistics 11–12 days Optional Lesson: 10		
week 21 week 22 week 23	Unit 7 Linear Inequalities and Systems 11 days Optional Lessons: none	Unit 6 Complex Numbers 13–17 days Optional: 1, 2, 11, 15	Unit 6 (MA) Trigonometric Functions 23 days Optional Lessons: none
week 24 week 25 week 26 week 27	Unit 8 (MA) Functions 23 days Optional Lessons: none	Unit 7 Circles 20 days Optional Lessons: none	Unit 7 (MA) Statistical Inferences 17–18 days Optional Lesson: 4
week 28 week 29 week 30 week 31 week 32	Unit 9 (MA) Introduction to Exponential Functions 22–24 days Optional Lesson: 13, 14	Unit 8 Conditional Probability 11–13 days Optional Lessons: 1, 11	

(MA) = Unit has Mid-Unit Assessment

Total number of days = Lessons + Assessments – Optional Lessons

Math 1 = 140, Math 2 = 136, Math 3 = 132

Dependency Chart

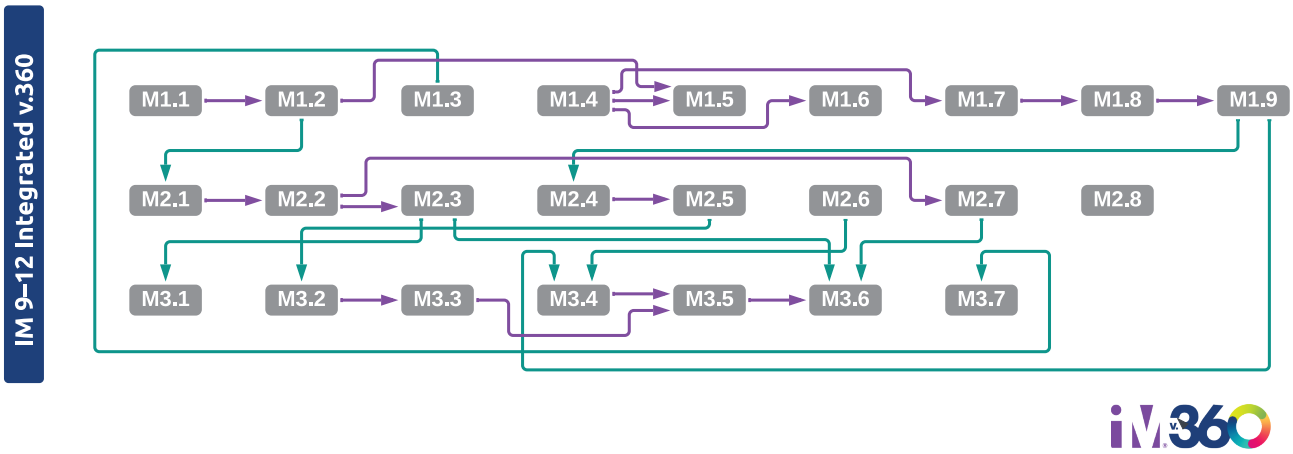

In the unit dependency chart, an arrow indicates that a particular unit is designed for students who already know the material in a previous unit. Reversing the order of the units would have a negative effect on mathematical or pedagogical coherence. For example, there is an arrow from M1.8 to M1.9 because when exponential functions are introduced, function notation is used, assuming that students are already familiar with the notation.
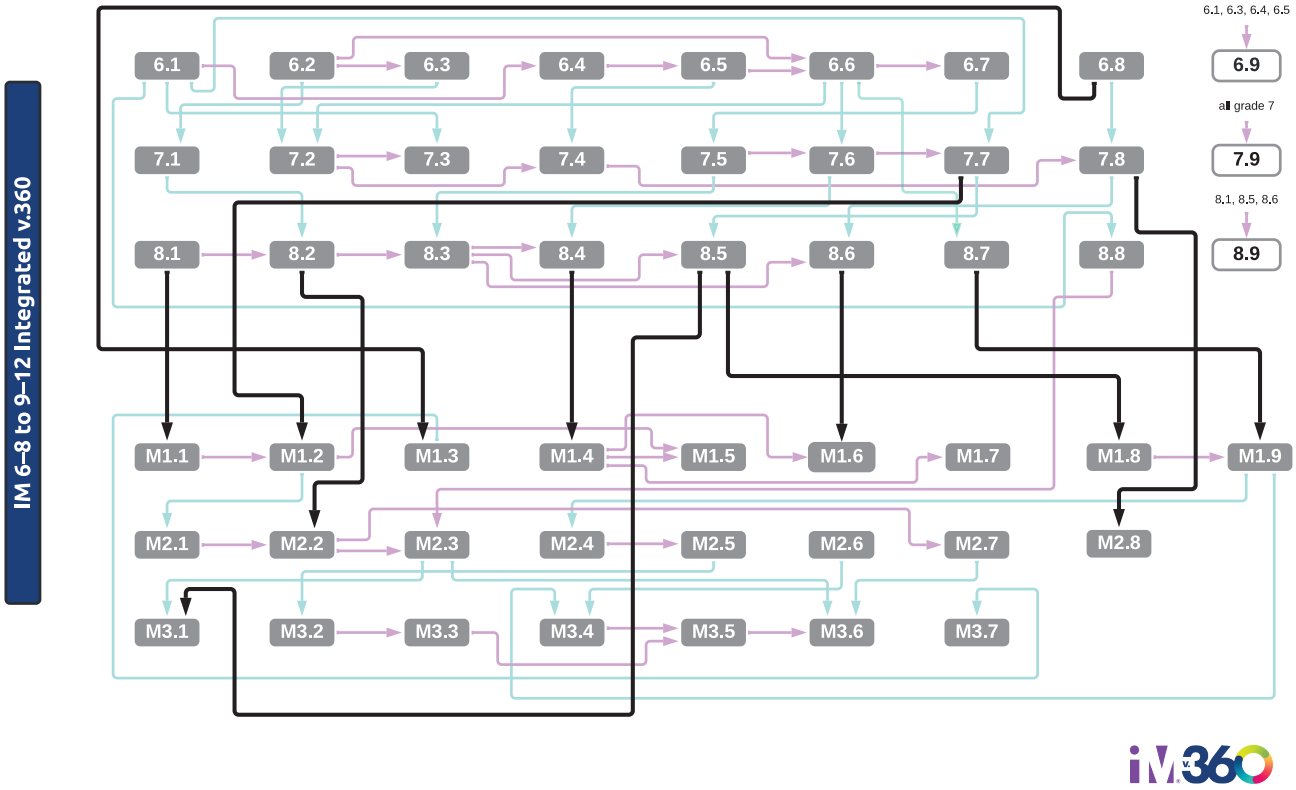
The following chart shows unit dependencies between 6–8 and Integrated Math.