Unit 2, Lesson 15

# Using the Pythagorean Theorem and Similarity

Let's explore right triangles with altitudes drawn to the hypotenuse.

## 15.1 Similar, Right?

Is triangle $ADC$ similar to triangle $CDB$? Explain or show your reasoning.

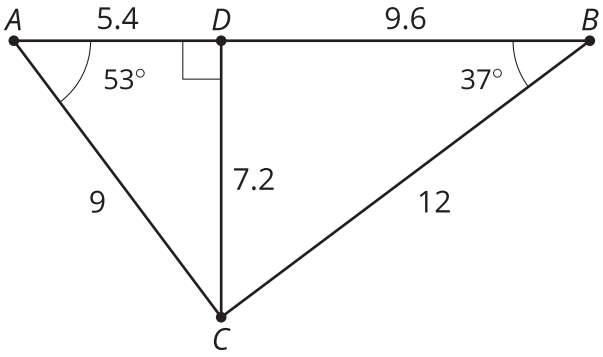

# 15.2 Tangled Triangles

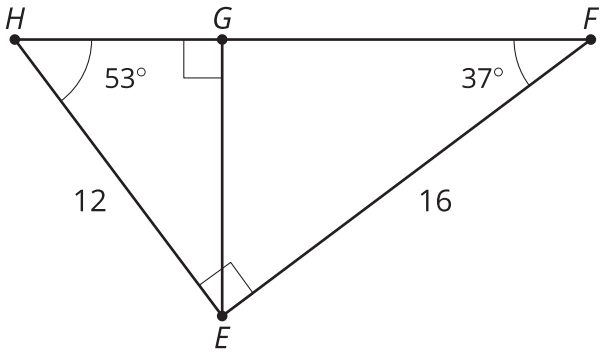


Trace the 2 smaller triangles onto separate pieces of tracing paper. Use your tracing paper to convince yourself that all 3 triangles are similar.

1. What are some similarity statements for the three triangles?

2. There are 3 pairs of triangles. What is a scale factor that could be used with a dilation to show similarity for each pair of triangles?

3. What are the lengths of sides $HG$, $GF$, and $HF$?

# 15.3 More Tangled Triangles

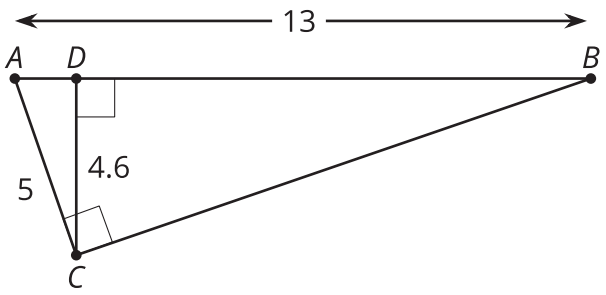


1. Convince yourself that there are 3 similar triangles. Write a similarity statement for the 3 triangles.

2. Write as many equations about proportional side lengths as you can.

3. What do you notice about these equations?

## Are you ready for more?

Tyler says that because triangle $ACD$ is similar to triangle $ABC$, the length of $CB$ is 11.96 units. Noah says that because $ABC$ is a right triangle, we can use the Pythagorean Theorem. So the length of $CB$ is 12 units exactly. Do you agree with either of them? Explain or show your reasoning.

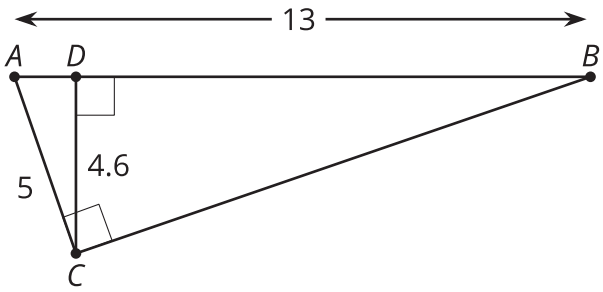

## Lesson 15 Summary

When we draw an **altitude** from the hypotenuse of a right triangle, we get three pairs of similar triangles that can be used to find missing lengths. An altitude is a segment from one vertex of the triangle to the line containing the opposite side and that is perpendicular to the opposite side. For right triangle $PQR$ we can draw the altitude $PS$.

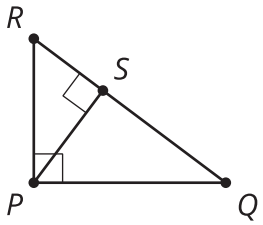


Why are triangles $PQR$, $SQP$, and $SPR$ all similar to each other?

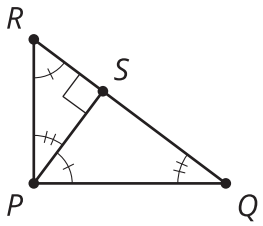


Triangles $PQR$ and $SQP$ are similar by the Angle-Angle Triangle Similarity Theorem because angle $Q$ is in both triangles, and both triangles are right triangles, so angles $RPQ$ and $PSQ$ are congruent. Triangles $PQR$ and $SPR$ are similar by the Angle-Angle Triangle Similarity Theorem because angle $R$ is in both triangles, and both triangles are right triangles, so angles $RPQ$ and $RSP$ are congruent. Because triangles $SQP$ and $SPR$ are both similar to triangle $PQR$, they are also similar to each other.

Because the triangles $PQR$, $SQP$, and $SPR$ are all similar, corresponding angles are congruent and pairs of corresponding sides are scaled copies of each other, by the same scale factor. We can use the proportionality of pairs of corresponding side lengths to find missing side lengths. For example, suppose we need to find $PS$ and know that $RS = 3$ and $QS = 7$. Because triangle $SQP$ is similar to triangle $SPR$, we know that $\frac{RS}{PS} = \frac{PS}{QS}$. So $\frac{3}{PS} = \frac{PS}{7}$, and $PS = \sqrt{21}$. Or, suppose we need to find $SQ$ and know that $PQ = 5$ and $RQ = 12$. Because triangle $PQR$ is similar to triangle $SQP$, we know that $\frac{RQ}{PQ} = \frac{PQ}{SQ}$. So $\frac{12}{5} = \frac{5}{SQ}$, and $SQ = \frac{25}{12}$.