Unit 2, Lesson 15

Using the Pythagorean Theorem and Similarity

Let's explore right triangles with altitudes drawn to the hypotenuse.

15.1 Similar, Right?

Is triangle ADC similar to triangle CDB? Explain or show your reasoning.

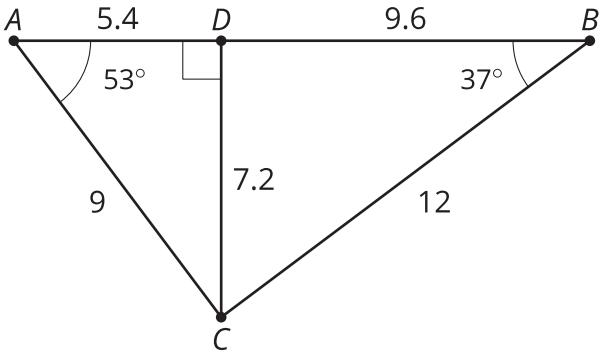

15.2 Tangled Triangles

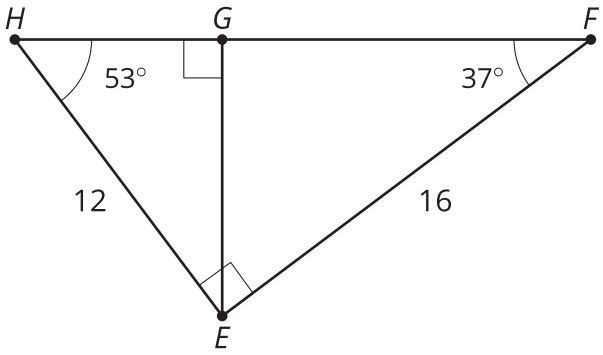

Trace the 2 smaller triangles onto separate pieces of tracing paper. Use your tracing paper to convince yourself that all 3 triangles are similar.

1. What are some similarity statements for the three triangles?

2. There are 3 pairs of triangles. What is a scale factor that could be used with a dilation to show similarity for each pair of triangles?

3. What are the lengths of sides HG, GF, and HF?

15.3 More Tangled Triangles

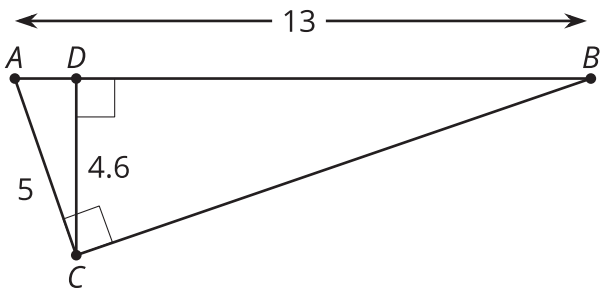

1. Convince yourself that there are 3 similar triangles. Write a similarity statement for the 3 triangles.

2. Write as many equations about proportional side lengths as you can.

3. What do you notice about these equations?

Are you ready for more?

Tyler says that because triangle ACD is similar to triangle ABC, the length of CB is 11.96 units. Noah says that because ABC is a right triangle, we can use the Pythagorean Theorem. So the length of CB is 12 units exactly. Do you agree with either of them? Explain or show your reasoning.

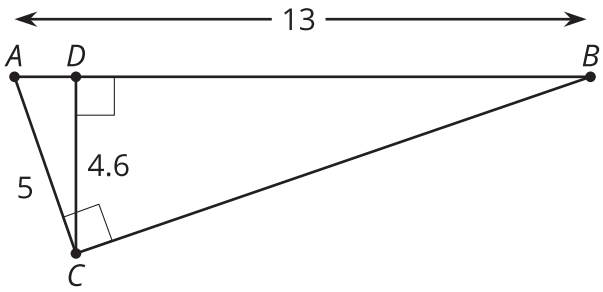

Lesson 15 Summary

When we draw an **altitude** from the hypotenuse of a right triangle, we get three pairs of similar triangles that can be used to find missing lengths. An altitude is a segment from one vertex of the triangle to the line containing the opposite side and that is perpendicular to the opposite side. For right triangle PQR we can draw the altitude PS.

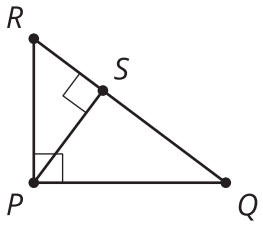

Why are triangles PQR, SQP, and SPR all similar to each other?

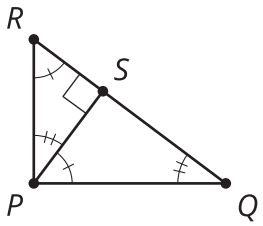

Triangles PQR and SQP are similar by the Angle-Angle Triangle Similarity Theorem because angle Q is in both triangles, and both triangles are right triangles, so angles RPQ and PSQ are congruent. Triangles PQR and SPR are similar by the Angle-Angle Triangle Similarity Theorem because angle R is in both triangles, and both triangles are right triangles, so angles RPQ and RSP are congruent. Because triangles SQP and SPR are both similar to triangle PQR, they are also similar to each other.

Because the triangles PQR, SQP, and SPR are all similar, corresponding angles are congruent and pairs of corresponding sides are scaled copies of each other, by the same scale factor. We can use the proportionality of pairs of corresponding side lengths to find missing side lengths. For example, suppose we need to find PS and know that $RS = 3$ and $QS = 7$. Because triangle SQP is similar to triangle SPR, we know that $\frac{RS}{PS} = \frac{PS}{QS}$. So $\frac{3}{PS} = \frac{PS}{7}$, and $PS = \sqrt{21}$. Or, suppose we need to find SQ and know that $PQ = 5$ and $RQ = 12$. Because triangle PQR is similar to triangle SQP, we know that $\frac{RQ}{PQ} = \frac{PQ}{SQ}$. So $\frac{12}{5} = \frac{5}{SQ}$, and $SQ = \frac{25}{12}$.