Connecting Similarity and Transformations

Let's identify similar figures.

6.1 Dilation Miscalculation

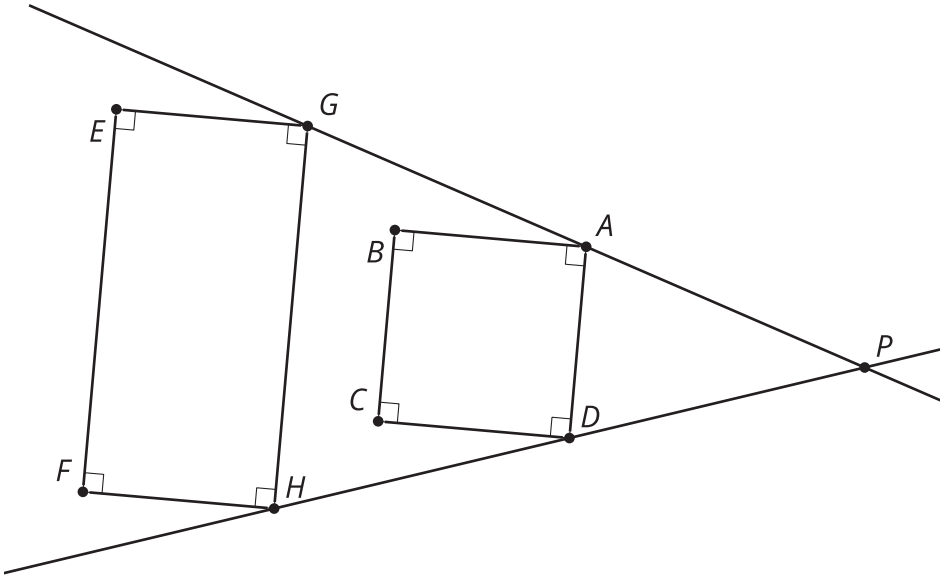

How do you know that $GHFE$ is not a dilation of $ADCB$?

6.2 Card Sort: Not-So-Rigid Transformations

1. Your teacher will give you a set of cards. Sort the cards into categories of your choosing. Be prepared to explain the meaning of your categories.

2. Your teacher will assign you one card. Write the sequence of transformations (translation, rotation, reflection, dilation) to take one figure to the other.

3. What scale factor is used to go from Figure F to Figure G? What scale factor is used to go from Figure G to Figure F?

Are you ready for more?

For your card, find a sequence of transformations that takes Figure G to Figure F. How does this sequence compare to the sequence that took Figure F to Figure G?

6.3 Alphabet Soup

Are the triangles **similar**?

$\overline{AB} \parallel \overline{QR}, \overline{AB} \perp \overline{AE}, \overline{QR} \perp \overline{QT}, \angle B \cong \angle R, \angle E \cong \angle T$

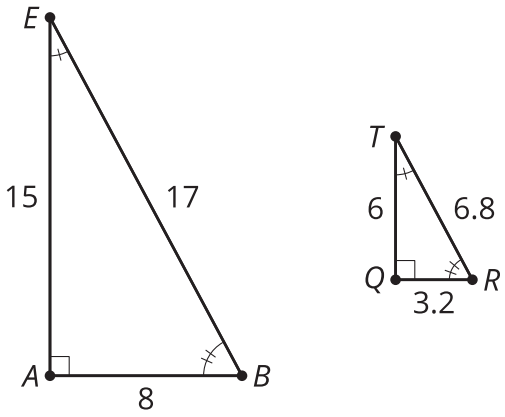

1. Write a sequence of transformations (dilation, translation, rotation, reflection) to take one triangle to the other.

2. Write a similarity statement about the 2 figures, and explain how you know they are similar.

3. Compare your statement with your partner's statement. Is there more than one correct way to write a similarity statement? Is there a wrong way to write a similarity statement?

Lesson 6 Summary

One figure is **similar** to another if there is a sequence of rigid motions and dilations that takes the first figure so that it fits exactly over the second. For example, triangle DHF is similar to triangle EHG ($\triangle DHF \sim \triangle EHG$).

What is a rotation and a dilation that will take DHF onto EHG?

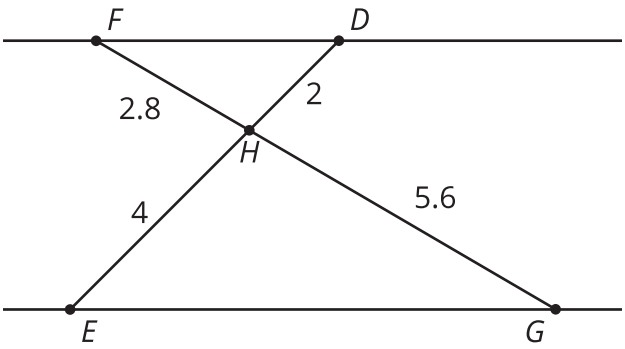

The triangles are similar because a $180°$ rotation of DHF using center H will take segment HF onto segment HG, because $180°$ rotations take lines through the center of the rotation to themselves. It will also take segment HD onto segment HE for the same reason. Then G will be on a ray from H through F', and E will be on a ray from H through D'. Because $\frac{H'F'}{HG} = \frac{H'D'}{HE} = \frac{1}{2}$, a dilation by a scale factor of 2 and center H will take $D'H'F'$ to fit exactly onto EHG. Therefore, there is a sequence of rigid motions and dilations that takes DHF onto EHG, and $\triangle DHF \sim \triangle EHG$.

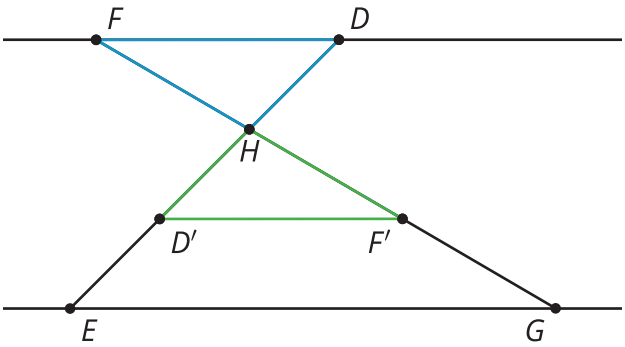

- Because both rigid motions and dilations leave corresponding angles congruent, all pairs of corresponding angles in similar figures are congruent. In this example, angle D is congruent to angle E, angle F is congruent to angle G, and angle DHF is congruent to angle EHG.
- Because rigid motions keep lengths congruent and dilations scale them at the same proportion, all pairs of corresponding sides in similar figures are in the same proportion. In this example, $\frac{HE}{HD} = \frac{HG}{HF} = \frac{EG}{DF}$.