Unit 6, Lesson 8

Slicing Solids

Let's see what shapes you get when you slice a three-dimensional object.

8.1 Prisms, Pyramids, and Polyhedra

Describe each shape as precisely as you can.

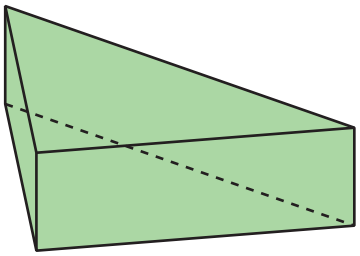

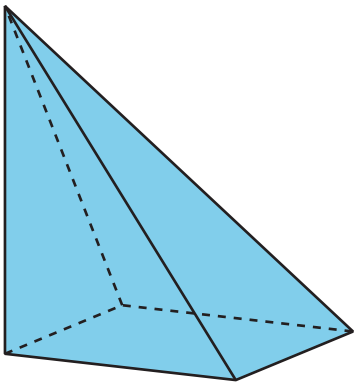

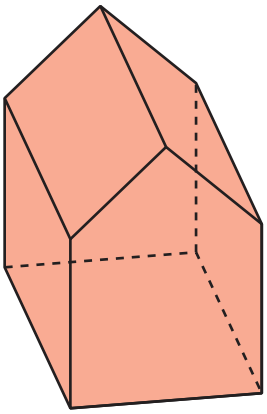

 CC BY NC Illustrative Mathematics, based on IM 6–8 Math, CC BY Open Up Resources.

8.2 What's the Cross-Section?

Here is a rectangular **prism** and a **pyramid** with the same base and same height.

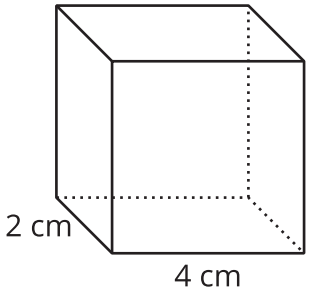

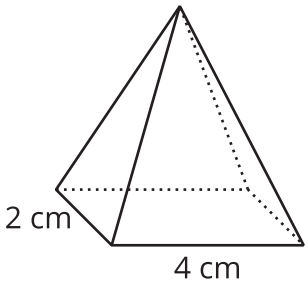

1. Think about slicing each solid parallel to its **base**, halfway up. What shape would each **cross-section** be? What is the same about the two cross-sections? What is different?

2. Think about slicing each solid parallel to its base, near the top. What shape would each cross-section be? What is the same about the two cross-sections? What is different?

Are you ready for more?

Describe the cross-sections that would result from slicing each solid perpendicular to its base.

 CC BY NC Illustrative Mathematics, based on IM 6–8 Math, CC BY Open Up Resources.

8.3 Card Sort: Cross-Sections

Your teacher will give you a set of cards. Take turns with your partner to group the cards.

1. For each group that you find, explain to your partner how you know it's a match.
2. For each group that your partner finds, listen carefully to the explanation. If you disagree, discuss your thinking and work to reach an agreement.

8.4 Drawing Cross-Sections

Draw and describe each cross-section.

1. Here is a picture of a rectangular prism, 4 units by 2 units by 3 units.

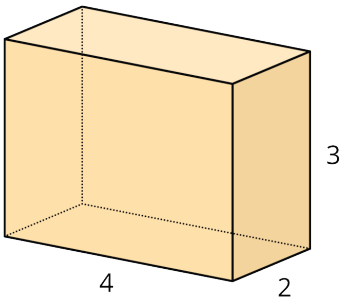

   a. A plane cuts the prism parallel to the bottom and top faces.

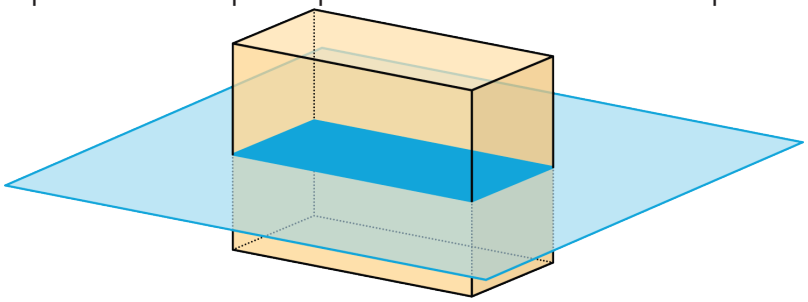

   b. The plane moves up and cuts the prism at a different height.

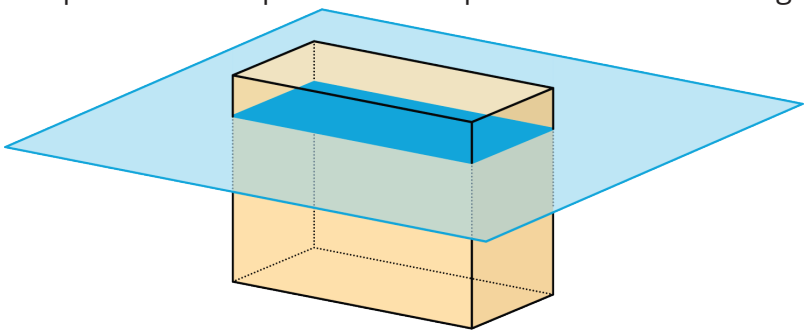

CC BY NC Illustrative Mathematics, based on IM 6–8 Math, CC BY Open Up Resources.

c. A vertical plane cuts the prism diagonally.

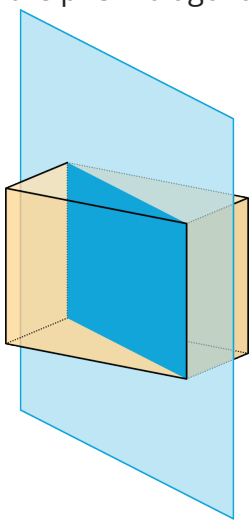

2. A square pyramid has a base that is 4 units by 4 units. Its height is also 4 units.

a. A plane cuts the pyramid parallel to the base.

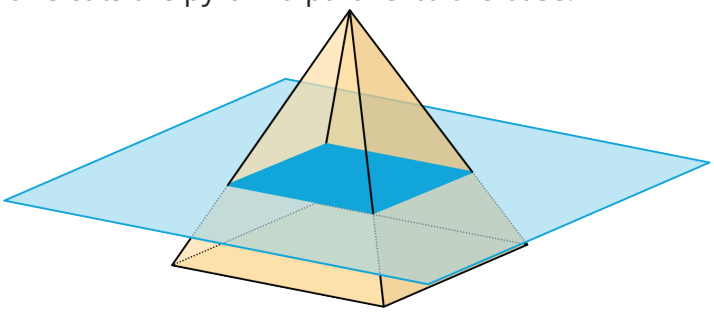

b. A vertical plane cuts the pyramid.

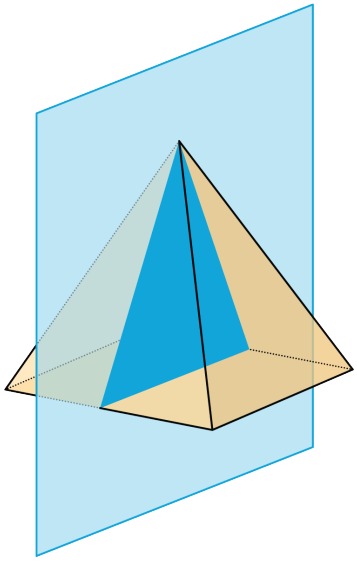

 CC BY NC Illustrative Mathematics, based on IM 6–8 Math, CC BY Open Up Resources.

3. A cube has an edge of length 4.

   a. A plane cuts off the corner of the cube.

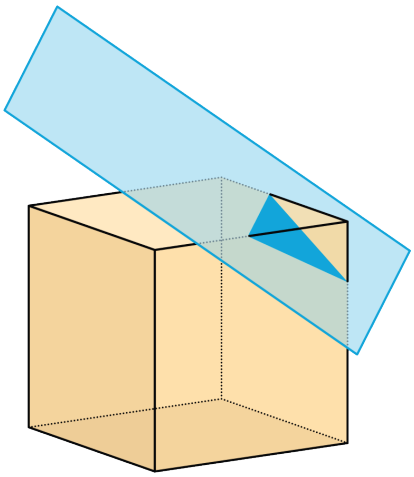

   b. The plane moves farther from the corner and makes a cut through the middle of the cube.

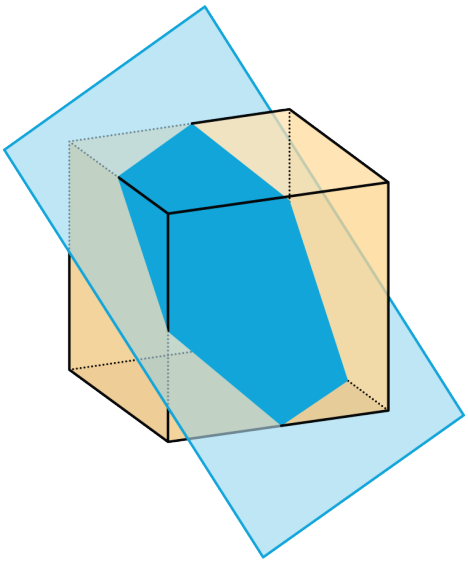

CC BY NC Illustrative Mathematics, based on IM 6–8 Math, CC BY Open Up Resources.

8.5 Volume and Height

Your teacher will show you two different containers filling with water. You will investigate the height of water in each container as functions of the water volume.

1. Container A:

   a. What shape is the container?

   b. Make a prediction about the shape of the graph.

   c. Record the measurements given in the video in the table.

volume (ml)	0	10	20	30	40	50
height (cm)						

   d. Create a graph that shows the height of the water in the container as a function of the water volume.

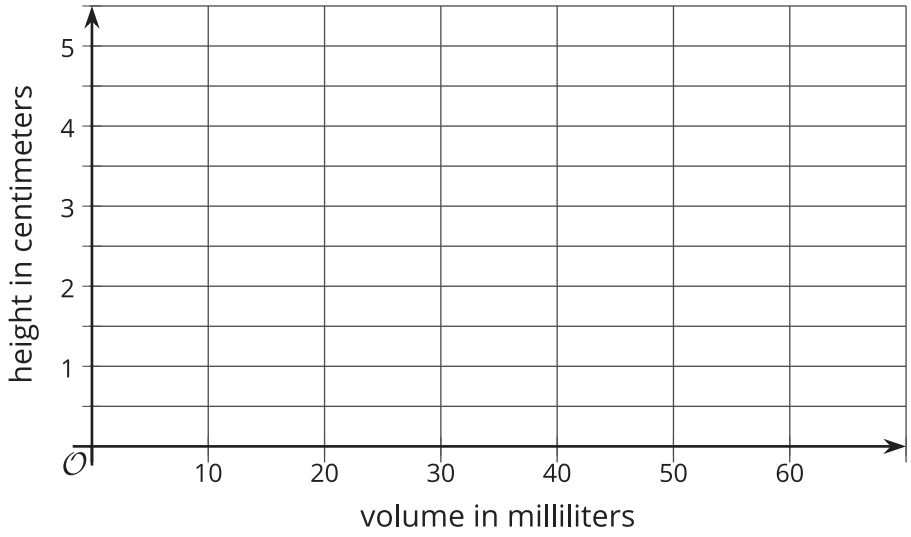

 CC BY NC Illustrative Mathematics, based on IM 6–8 Math, CC BY Open Up Resources.

2. Container B:

   a. What shape is the container?

   b. Make a prediction about the shape of the graph.

   c. Record the measurements given in the video in the table.

volume (ml)	0	5	10	15	20	25
height (cm)						

   d. Create a graph that shows the height of the water in the container as a function of the water volume.

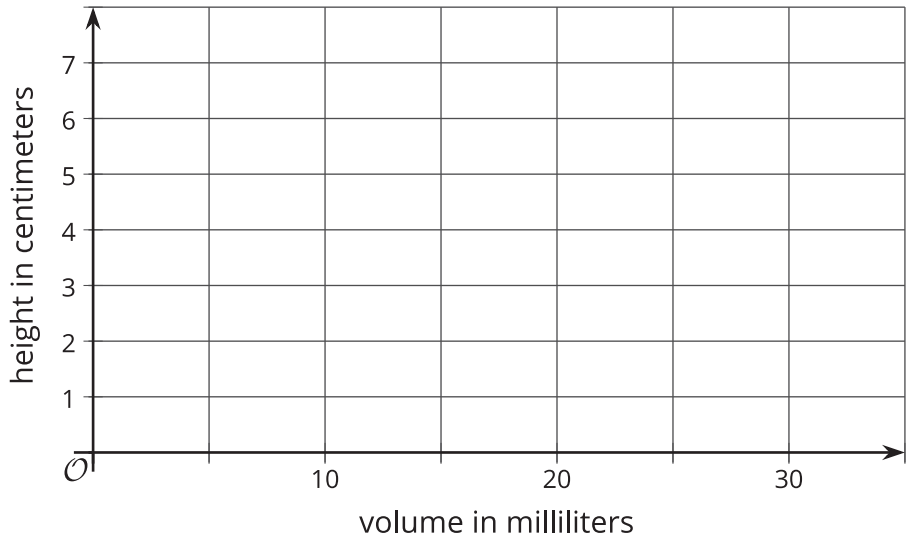

CC BY NC Illustrative Mathematics, based on IM 6–8 Math, CC BY Open Up Resources.

Lesson 8 Summary

When we slice a three-dimensional object, we expose new faces that are two-dimensional. The two-dimensional face is a **cross-section**. Many different cross-sections are possible when slicing the same three-dimensional object.

Here are two peppers. One is sliced horizontally, and the other is sliced vertically, producing different cross-sections.

The imprints of the slices represent the two-dimensional faces created by each slice.

It takes practice imagining what the cross-section of a three-dimensional object will be for different slices. It helps to experiment and see for yourself what happens!

CC BY NC Illustrative Mathematics, based on IM 6–8 Math, CC BY Open Up Resources.