Unit 7, Lesson 5

Using Equations to Solve for Unknown Angles

Let's figure out missing angles using equations.

5.1 Is This Enough?

Tyler thinks that this figure has enough information to figure out the values of a and b.

Do you agree? Explain your reasoning.

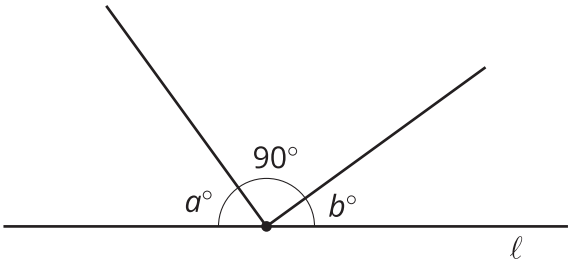

5.2 What Does It Look Like?

Elena and Diego each wrote equations to represent these diagrams. For each diagram, decide which equation you agree with, and then solve it.

1. Elena: $x = 35$

   Diego: $x + 35 = 180$

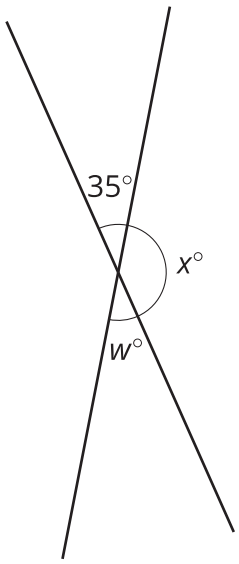

CC BY NC Illustrative Mathematics, based on IM 6–8 Math, CC BY Open Up Resources.

2. Elena: $35 + w + 41 = 180$

   Diego: $w + 35 = 180$

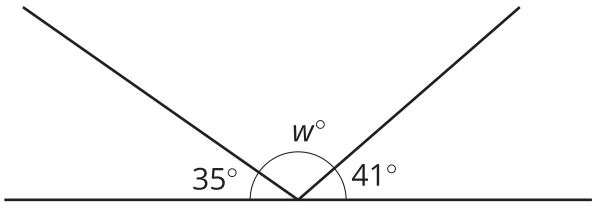

3. Elena: $w + 35 = 90$

   Diego: $2w + 35 = 90$

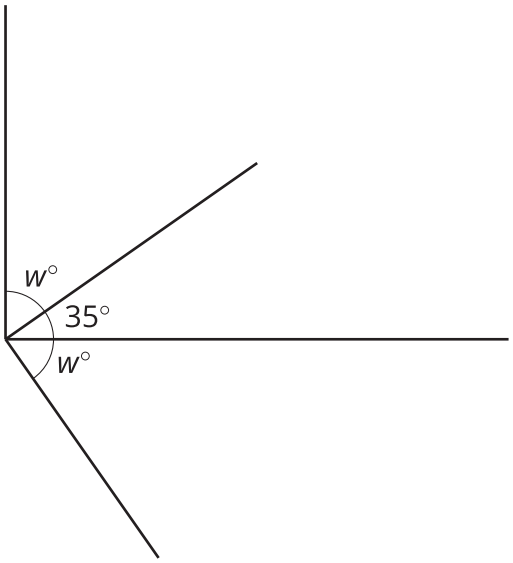

4. Elena: $2w + 35 = 90$

   Diego: $w + 35 = 90$

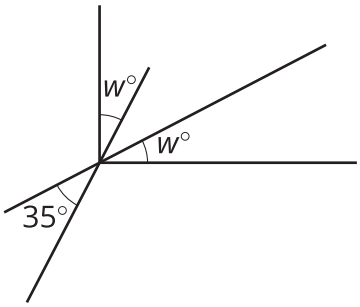

5. Elena: $w + 148 = 180$

   Diego: $x + 90 = 148$

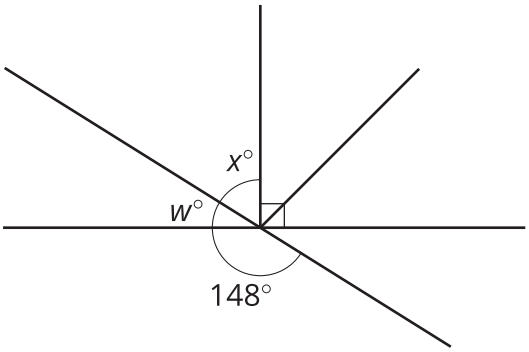

5.3 Calculate the Measure

Find the unknown angle measures. Show your thinking. Organize it so it can be followed by others.

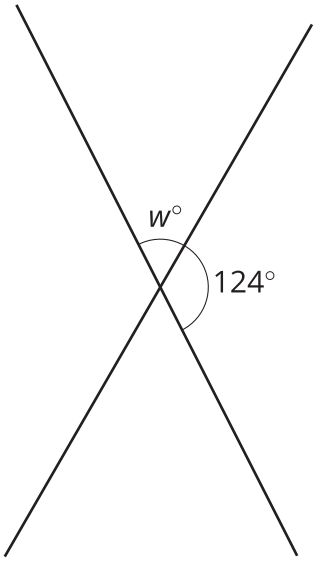

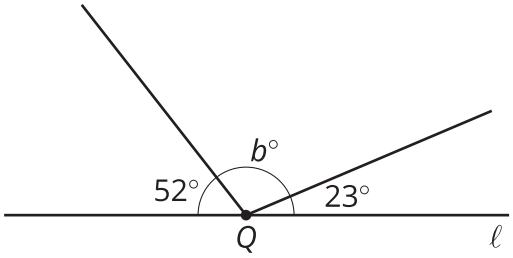

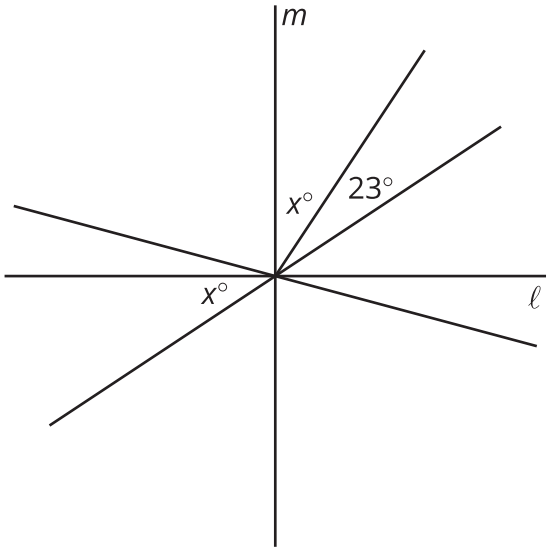

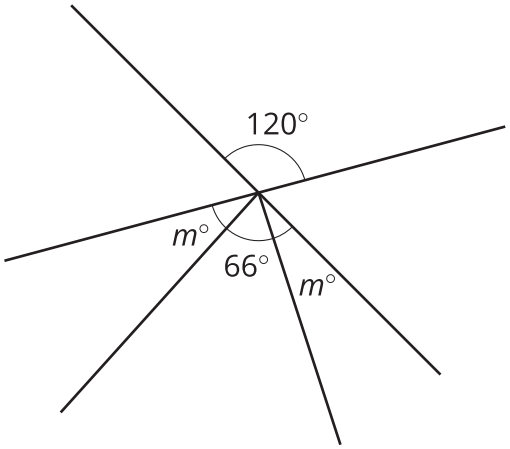

Are you ready for more?

The diagram contains three squares. Three additional segments have been drawn that connect corners of the squares. We want to find the exact value of $a + b + c$.

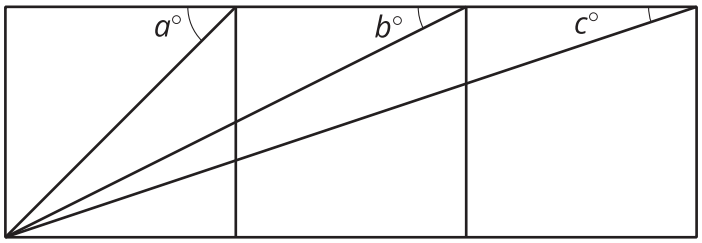

1. Use a protractor to measure the three angles. Use your measurements to conjecture about the value of $a + b + c$.

2. Find the exact value of $a + b + c$ by reasoning about the diagram.

Lesson 5 Summary

To find an unknown angle measure, sometimes it is helpful to write and solve an equation that represents the situation. For example, suppose we want to know the value of x in this diagram.

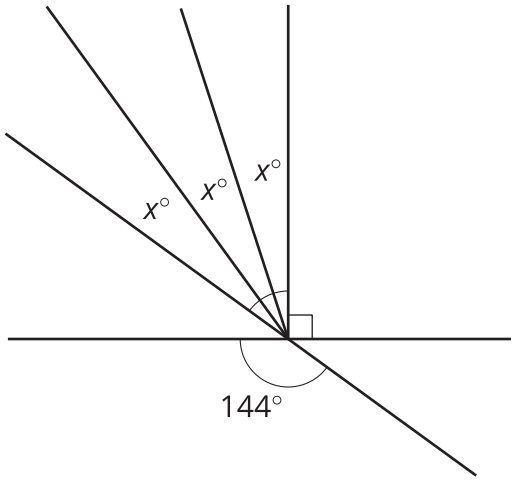

Using what we know about vertical angles, we can write the equation $3x + 90 = 144$ to represent this situation. Then we can solve the equation.

$$\begin{aligned} 3x + 90 &= 144 \\ 3x + 90 - 90 &= 144 - 90 \\ 3x &= 54 \\ 3x \cdot \frac{1}{3} &= 54 \cdot \frac{1}{3} \\ x &= 18 \end{aligned}$$

CC BY NC Illustrative Mathematics, based on IM 6–8 Math, CC BY Open Up Resources.