CC BY NC 2024 Illustrative Mathematics®

Card Sort: Match the Expression
A

$(6 \times 5) \times 3$

Card Sort: Match the Expression
B

$3 \times 8 \times 3$

Card Sort: Match the Expression
C

2×12

Card Sort: Match the Expression
D

$3 \times 7 \times 4$

Card Sort: Match the Expression
E

24×8

Card Sort: Match the Expression
F

15×6

Card Sort: Match the Expression
G

24×3

Card Sort: Match the Expression
H

$6 \times (5 \times 3)$

Card Sort: Match the Expression
I

$(7 \times 4) \times 3$

Card Sort: Match the Expression
J

$8 \times 3 \times 8 \times 3$

Card Sort: Match the Expression
K

$2 \times 12 \times 12$

Card Sort: Match the Expression
L

9×8

Card Sort: Match the Expression
M

$15 \times 6 \times 5$

Card Sort: Match the Expression
N

$7 \times 12 \times 7$

Card Sort: Match the Expression
O

24×1

CC BY NC 2024 Illustrative Mathematics®

Card Sort: Match the Expression

1

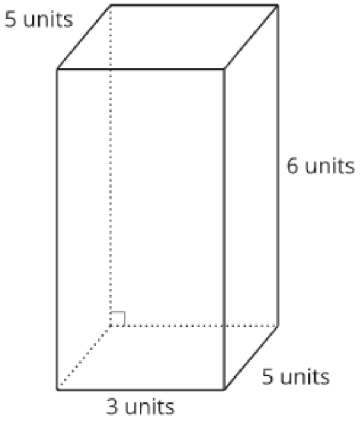

Card Sort: Match the Expression

2

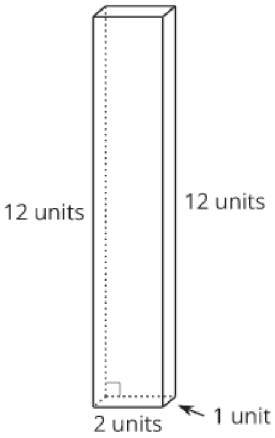

Card Sort: Match the Expression

3

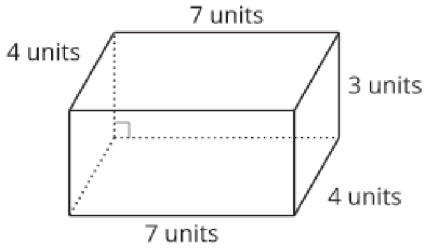

Card Sort: Match the Expression

4

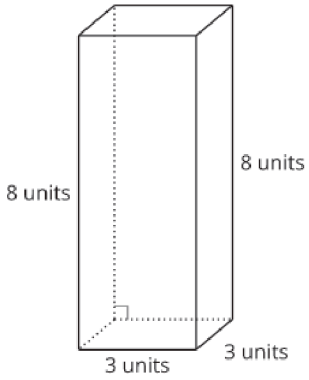

CC BY NC 2024 Illustrative Mathematics®