Not-So-Rigid Transformations

Card 1

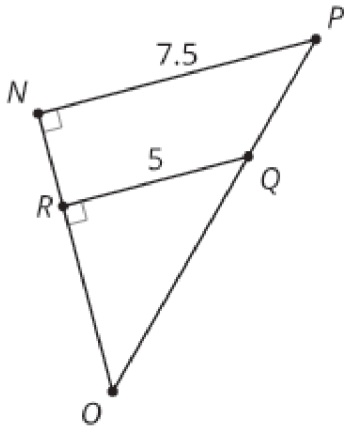

Figure *F*: *PON*, Figure *G*: *QOR*

Not-So-Rigid Transformations

Card 2

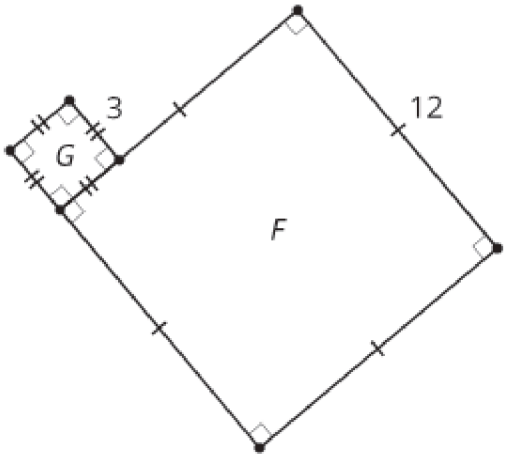

Not-So-Rigid Transformations

Card 3

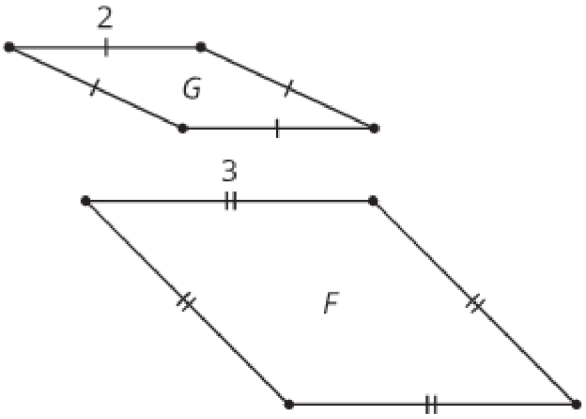

Not-So-Rigid Transformations

Card 4

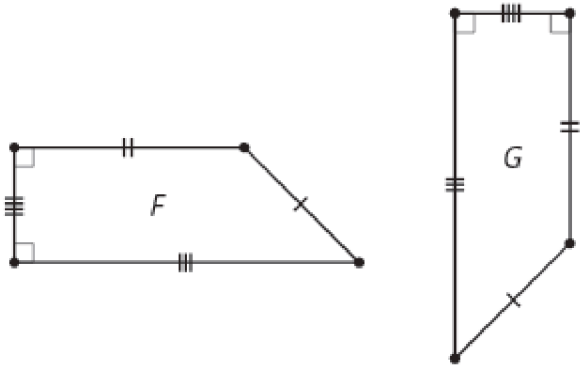

Not-So-Rigid Transformations

Card 5

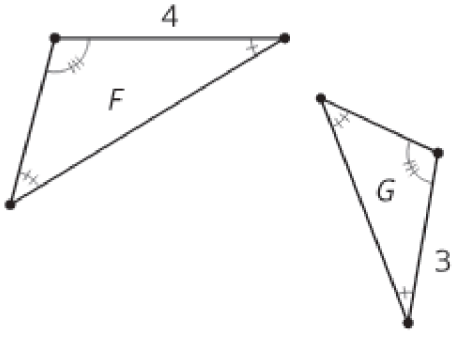

Not-So-Rigid Transformations

Card 6

