Volume of Prisms

Let's look at the volume of prisms that have fractional measurements.

11.1 A Box of Cubes

1. How many cubes with an edge length of 1 inch fill this box?

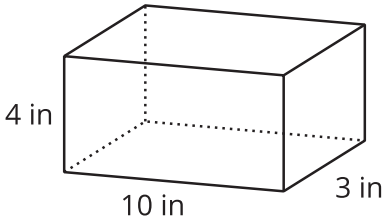

2. If the cubes had an edge length of 2 inches, would you need more or fewer cubes to fill the box? Explain your reasoning.

3. If the cubes had an edge length of $\frac{1}{2}$ inch, would you need more or fewer cubes to fill the box? Explain your reasoning.

 CC BY NC Illustrative Mathematics, based on IM 6–8 Math, CC BY Open Up Resources.

11.2 Volumes of Cubes and Prisms

Your teacher will give you cubes that have edge lengths of $\frac{1}{2}$ inch.

1. Here is a drawing of a cube with edge lengths of 1 inch.

   a. How many cubes with edge lengths of $\frac{1}{2}$ inch are needed to fill this cube?

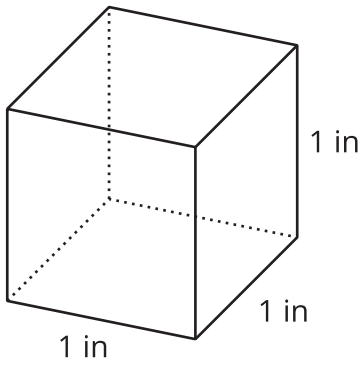

   b. What is the volume, in cubic inches, of a cube with edge lengths of $\frac{1}{2}$ inch? Explain or show your reasoning.

2. Four cubes are piled in a single stack to make a prism. Each cube has an edge length of $\frac{1}{2}$ inch. Sketch the prism, and find its volume in cubic inches.

CC BY NC Illustrative Mathematics, based on IM 6–8 Math, CC BY Open Up Resources.

3. Use cubes with an edge length of $\frac{1}{2}$ inch to build prisms with the lengths, widths, and heights shown in the table.

   For each prism, record in the table how many $\frac{1}{2}$-inch cubes can be packed into the prism and the volume of the prism.

prism length (in)	prism width (in)	prism height (in)	number of $\frac{1}{2}$-inch cubes in prism	volume of prism (in^3)
$\frac{1}{2}$	$\frac{1}{2}$	$\frac{1}{2}$		
1	1	$\frac{1}{2}$		
2	1	$\frac{1}{2}$		
2	2	1		
4	2	$\frac{3}{2}$		
5	4	2		
5	4	$2\frac{1}{2}$		

Are you ready for more?

A unit fraction has a 1 in the numerator.

- These are unit fractions: $\frac{1}{3}, \frac{1}{100}, \frac{1}{1}$.
- These are *not* unit fractions: $\frac{2}{9}, \frac{8}{1}, 2\frac{1}{5}$.

1. Find three unit fractions whose sum is $\frac{1}{2}$. An example is: $\frac{1}{8} + \frac{1}{8} + \frac{1}{4} = \frac{1}{2}$. How many examples like this can you find?

2. Find a box whose surface area in square units equals its volume in cubic units. How many like this can you find?

CC BY NC Illustrative Mathematics, based on IM 6–8 Math, CC BY Open Up Resources.

11.3 Cubes with Fractional Edge Lengths

1. Diego says that 108 cubes with an edge length of $\frac{1}{3}$ inch are needed to fill a rectangular prism that is 3 inches by 1 inch by $1\frac{1}{3}$ inch.

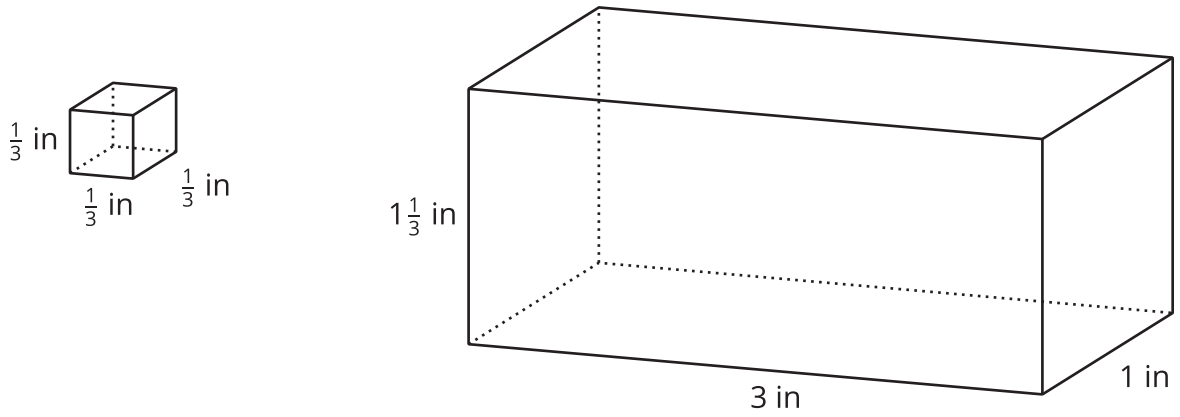

   a. Explain or show how this is true.

   b. What is the volume, in cubic inches, of the rectangular prism? Explain or show your reasoning.

CC BY NC Illustrative Mathematics, based on IM 6–8 Math, CC BY Open Up Resources.

2. Lin and Noah are packing small cubes into a larger cube with an edge length of $1\frac{1}{2}$ inches. Lin is using cubes with an edge length of $\frac{1}{2}$ inch, and Noah is using cubes with an edge length of $\frac{1}{4}$ inch.

   a. Who would need more cubes to fill the $1\frac{1}{2}$-inch cube? Be prepared to explain your reasoning.

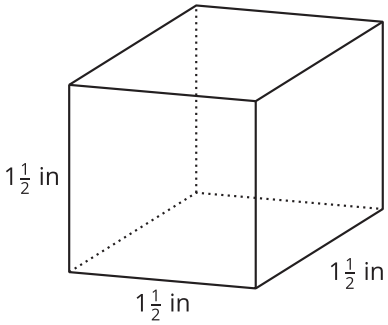

   b. If Lin and Noah each use their small cubes to find the volume of the larger $1\frac{1}{2}$-inch cube in cubic inches, will they get the same answer? Explain or show your reasoning.

CC BY NC Illustrative Mathematics, based on IM 6–8 Math, CC BY Open Up Resources.

Are you ready for more?

1. Find the area of a rectangle with side lengths $\frac{1}{2}$ and $\frac{2}{3}$.

2. Find the volume of a rectangular prism with side lengths $\frac{1}{2}$, $\frac{2}{3}$, and $\frac{3}{4}$.

3. What do you think happens if we keep multiplying fractions $\frac{1}{2} \cdot \frac{2}{3} \cdot \frac{3}{4} \cdot \frac{4}{5} \cdot \frac{5}{6} \ldots$?

4. Find the area of a rectangle with side lengths $\frac{1}{1}$ and $\frac{2}{1}$.

5. Find the volume of a rectangular prism with side lengths $\frac{1}{1}$, $\frac{2}{1}$, and $\frac{1}{3}$.

6. What do you think happens if we keep multiplying fractions $\frac{1}{1} \cdot \frac{2}{1} \cdot \frac{1}{3} \cdot \frac{4}{1} \cdot \frac{1}{5} \ldots$?

CC BY NC Illustrative Mathematics, based on IM 6–8 Math, CC BY Open Up Resources.

11.4 Fish Tank

A nature center has a fish tank in the shape of a rectangular prism. The tank is 10 feet long, $8\frac{1}{4}$ feet wide, and 6 feet tall.

1. What is the volume of the tank in cubic feet? Show your reasoning.

2. One day, a caretaker filled $\frac{4}{5}$ of the tank with water. What was the volume of the water in the tank, in cubic feet? What was the height of the water in the tank? Show your reasoning.

Are you ready for more?

Clare's recipe for banana bread won't fit in her favorite pan. The pan is $8\frac{1}{2}$ inches by 11 inches by 2 inches. The batter fills the pan to the very top, and when baking, the batter spills over the sides. To avoid spills, there should be about an inch between the top of the batter and the rim of the pan.

Clare has another rectangular pan. It has a base with an area of 81 square inches and a height of $2\frac{1}{2}$ inches. If she uses this pan, will the batter spill over during baking?

CC BY NC Illustrative Mathematics, based on IM 6–8 Math, CC BY Open Up Resources.

Lesson 11 Summary

If a rectangular prism has edge lengths of 2 units, 3 units, and 5 units, we can think of it as 2 layers of unit cubes, with each layer having $(3 \cdot 5)$ unit cubes in it. So the volume, in cubic units, is:

$$2 \cdot 3 \cdot 5$$

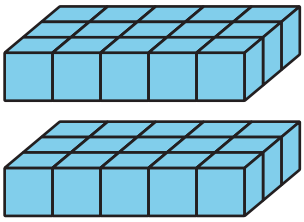

To find the volume of a rectangular prism with fractional edge lengths, we can think of it as being built of cubes that have a unit fraction for their edge length. For instance, if we build a prism that is $\frac{1}{2}$-inch tall, $\frac{3}{2}$-inch wide, and 4 inches long using cubes with a $\frac{1}{2}$-inch edge length, we would have:

- A height of 1 cube, because $1 \cdot \frac{1}{2} = \frac{1}{2}$.
- A width of 3 cubes, because $3 \cdot \frac{1}{2} = \frac{3}{2}$.
- A length of 8 cubes, because $8 \cdot \frac{1}{2} = 4$.

The volume of the prism would be $1 \cdot 3 \cdot 8$, which is 24 cubic units.

How do we find its volume in cubic inches? We know that each cube with a $\frac{1}{2}$-inch edge length has a volume of $\frac{1}{8}$ cubic inch, because $\frac{1}{2} \cdot \frac{1}{2} \cdot \frac{1}{2} = \frac{1}{8}$. Since the prism is built using 24 of these cubes, its volume, in cubic inches, would then be $24 \cdot \frac{1}{8}$, which is 3 cubic inches.

The volume of the prism, in cubic inches, can also be found by multiplying the fractional edge lengths in inches: $\frac{1}{2} \cdot \frac{3}{2} \cdot 4 = 3$

If a rectangular prism has edge lengths a units, b units, and c units, the volume is the product of a, b, and c.

$$V = a \cdot b \cdot c$$

This means that if we know the *volume* and *two edge lengths*, we can divide to find the *third* edge length.

Suppose the volume of a rectangular prism is $400\frac{1}{2}$ cm^3, one edge length is $\frac{11}{2}$ cm, another is 6 cm, and the third edge length is unknown. We can write a multiplication equation to represent the situation:

$$\frac{11}{2} \cdot 6 \cdot ? = 400\frac{1}{2}$$

We can find the third edge length by dividing:

$$400\frac{1}{2} \div \left(\frac{11}{2} \cdot 6\right) = ?$$

CC BY NC Illustrative Mathematics, based on IM 6–8 Math, CC BY Open Up Resources.