Unit 1, Lesson 6

Expressions for Volume

Let's write expressions for the volume of rectangular prisms.

Warm-up

True or False: Parentheses or No Parentheses?

Decide if each statement is true or false. Be prepared to explain your reasoning.

- $(4 \times 2) \times 5 = 4 \times (2 \times 5)$

- $(2 \times 5) \times 4 = 2 \times 20$

- $5 \times 4 \times 2 = 10 \times 40$

Activity 1

Card Sort: Match the Expression

Your teacher will give you a set of cards.

1. Sort the cards into categories in a way that makes sense to you. Be ready to explain the meaning of your categories.
2. Match each rectangular prism with the expression(s) that represents its volume in cubic units. Be ready to explain your reasoning.
3. Write one additional expression for each prism. Represent the volume in cubic units.

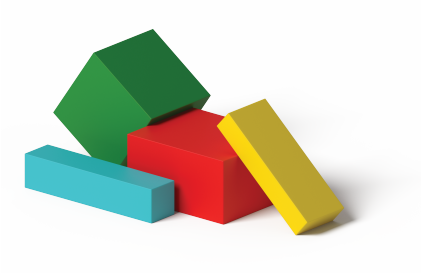

Activity 2

A Tale of Two Tables

1. Work with your partner to complete the tables. One partner completes Table 1 and the other completes Table 2.

Prism A

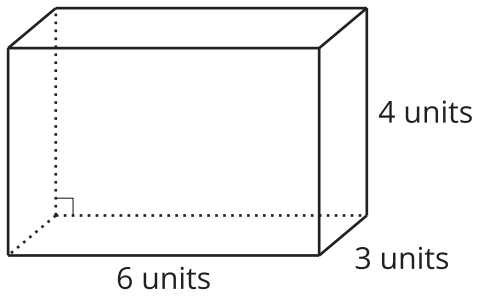

Prism B

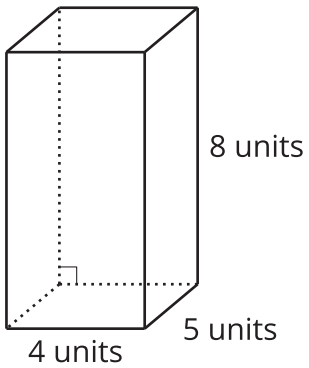

Table 1

	length (units)	width (units)	height (units)	volume (cubic units)
Prism A				
Prism B				

Table 2

	area of the base (square units)	height (units)	volume (cubic units)
Prism A			
Prism B			

2. Compare the tables and discuss:
   a. What do the tables have in common?
   b. What is different about the tables?

Activity 3

Two Truths and a Lie

Your teacher will assign you and your partner 2 prisms.

A

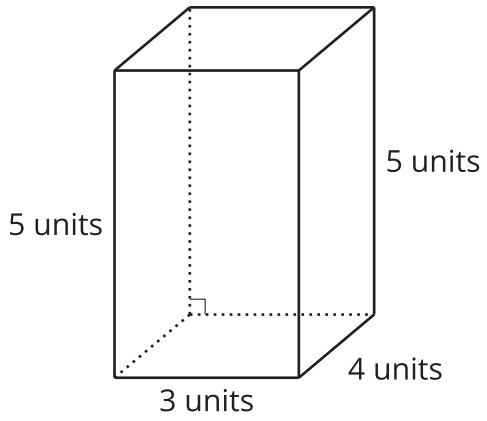

B

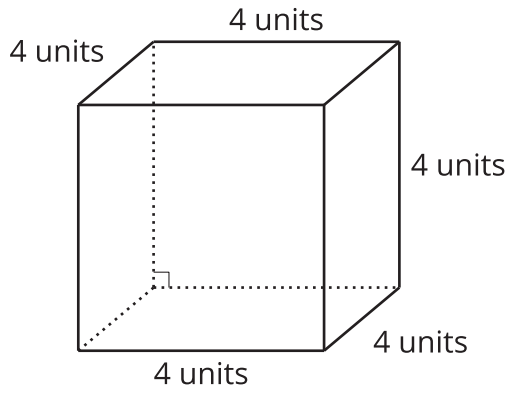

C

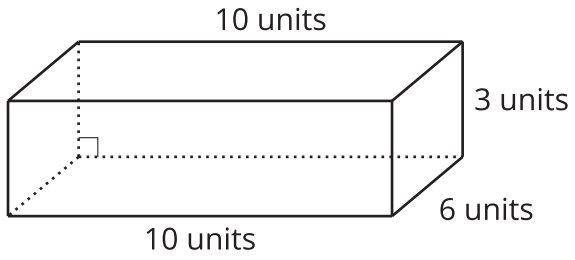

D

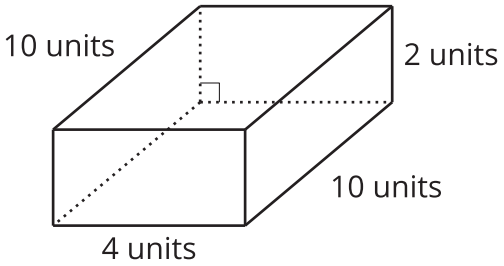

For each of your assigned prisms:

- Write 2 expressions to represent the volume in cubic units.
- Write 1 expression that does not represent the volume in cubic units.

Give your expressions to your partner.

1. Which expression *does not* represent the volume of the prism in cubic units? How do you know?

   _____

   _____

   _____

   _____

2. What other expressions represent the volume of the prism in cubic units?