Unit 1, Lesson 20

Transformations, Transversals, and Proof

Let's prove statements about parallel lines.

20.1 Angle Relationships

Lines ℓ and m are parallel. Find the value of x in each figure.

Figure A

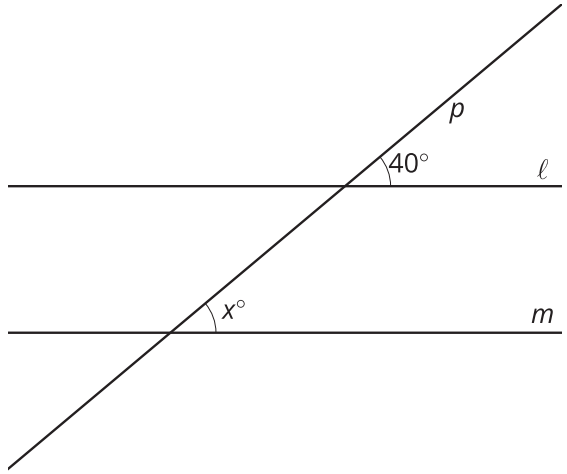

Figure B

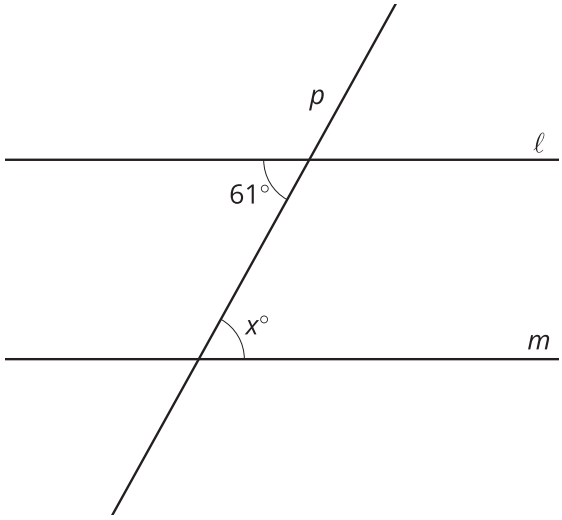

Figure C

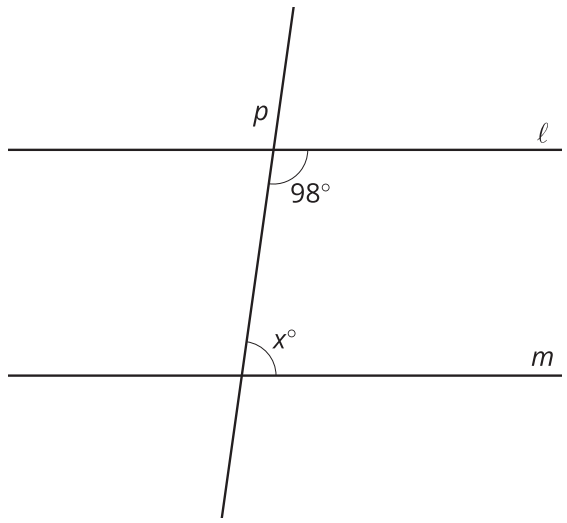

Figure D

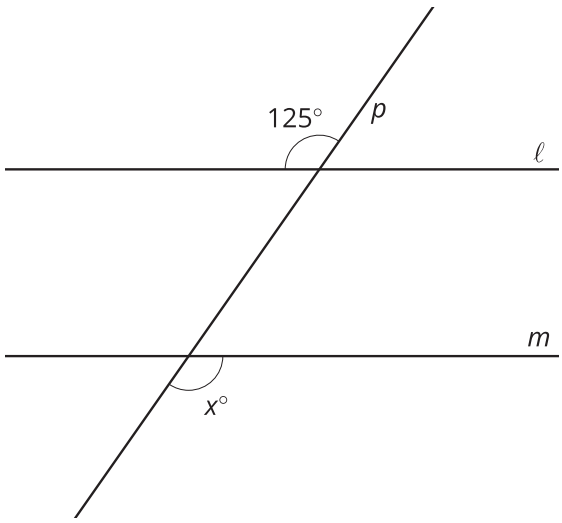

20.2 Make a Mark? Give a Reason

Here are intersecting lines AE and CD:

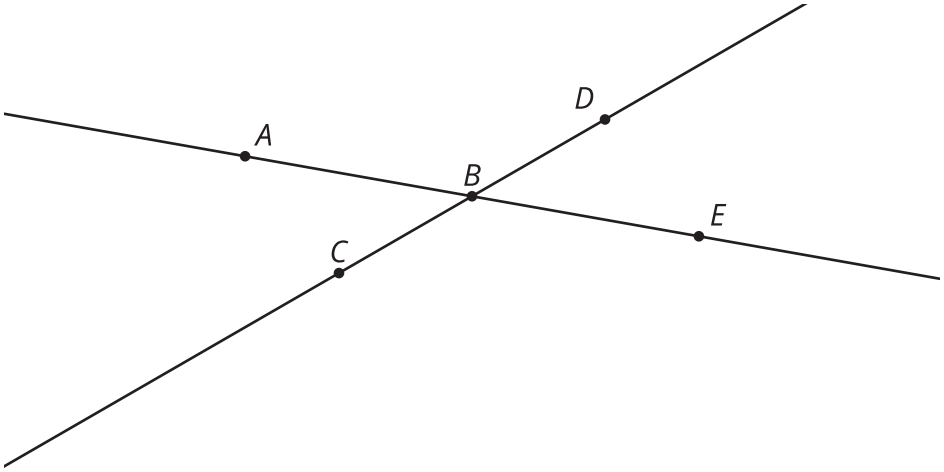

1. Translate lines AE and CD by the directed line segment from B to C. Label the images of A, B, C, D, E as A', B', C', D', E'.
2. What is true about lines AE and $A'E'$? Explain your reasoning.

3. Take turns with your partner to identify congruent angles.
   a. For each pair of congruent angles that you find, explain to your partner how you know the angles are congruent.
   b. For each match that your partner finds, listen carefully to their explanation. If you disagree, discuss your thinking and work to reach an agreement.

20.3 An Alternate Explanation

Here are intersecting lines AE and CD:

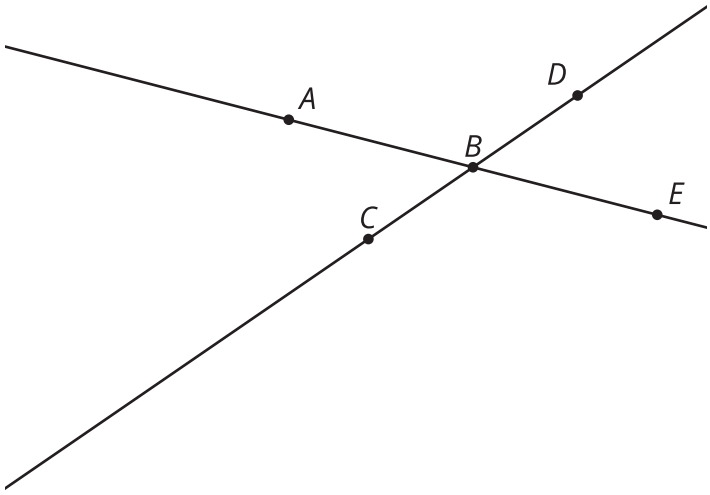

1. Rotate line AE by 180 degrees around point C. Label the images of A, B, C, D, E as A', B', C', D', E'.
2. What is true about lines AB and $A'B'$? Explain your reasoning.

3. Take turns with your partner to identify congruent angles.
   a. For each pair of congruent angles that you find, explain to your partner how you know the angles are congruent.
   b. For each match that your partner finds, listen carefully to their explanation. If you disagree, discuss your thinking and work to reach an agreement.

Are you ready for more?

1. Prove that 180-degree rotations take lines that do not pass through the center of rotation to parallel lines.

2. What is the image of a line that is rotated 180 degrees around a point on the line?

Lesson 20 Summary

There are often several different ways to explain why statements are true. Comparing the different ways can lead to new insights or more flexible understanding. Consider the angles formed when 2 parallel lines ℓ and m are cut by a transversal:

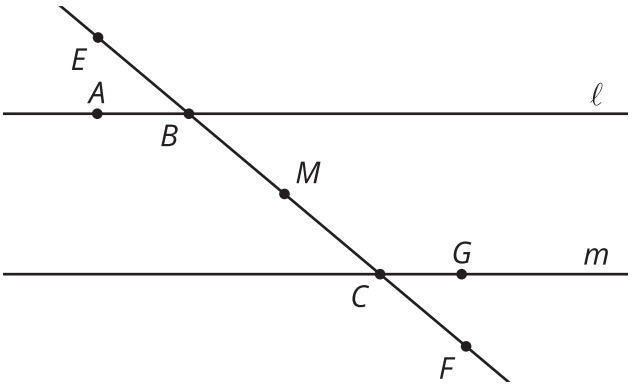

Suppose we want to explain why angle ABE is congruent to angle GCF. Label the midpoint of BC as M. Rotating 180 degrees around M takes angle ABE to angle GCF. Why? Well, B and C are equidistant from M, so the rotation takes B to C. Also, it takes the transversal to itself, so it takes the ray BE to the ray CF. Finally, the rotation takes line ℓ onto line m because 180-degree rotations take lines onto parallel lines, and m is the only line parallel to ℓ that also goes through C.

A different explanation can prove the same fact using a translation and the idea that vertical angles are congruent. Try thinking of that explanation yourself.